Quick Start Assembly/Installation Instructions

ANTENNAS DIRECT DB8e

Before attaching the antenna to any surface, TEST RECEPTION in that area.

Connect the antenna to the TV or receiver and run a full channel scan.
If reception is not as desired, move the antenna and rescan TV/receiver.

Required tools: 10 mm wrench and # 2 Phillips screwdriver

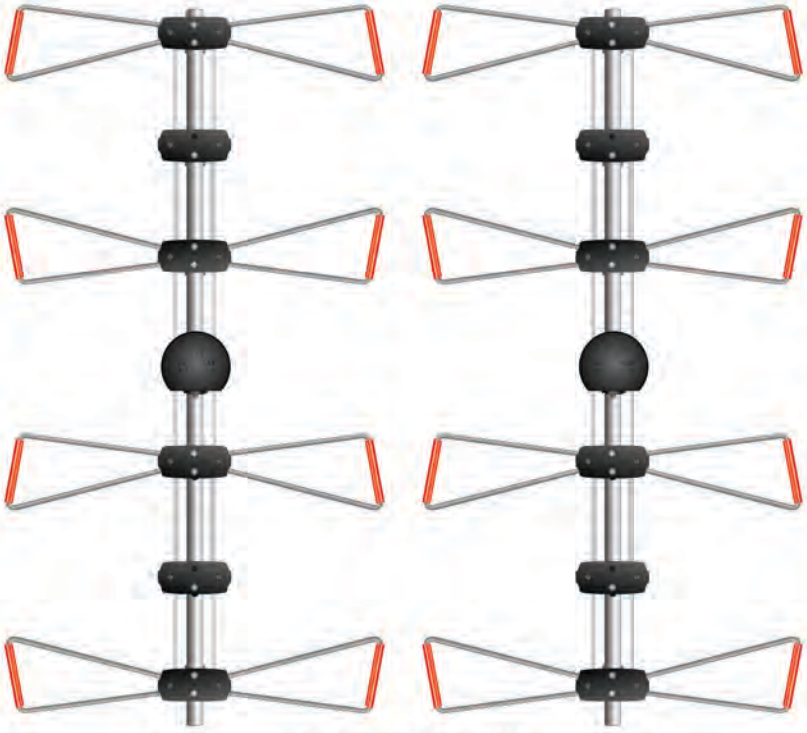

(2) Bowtie Elements

Element and Reflector Panel Hardware
(4) 5 1/2" Bolts with Aluminum Sleeves,
(4) Washers, (4) Nuts

(1) Cross Bar Mount

(1) Combiner

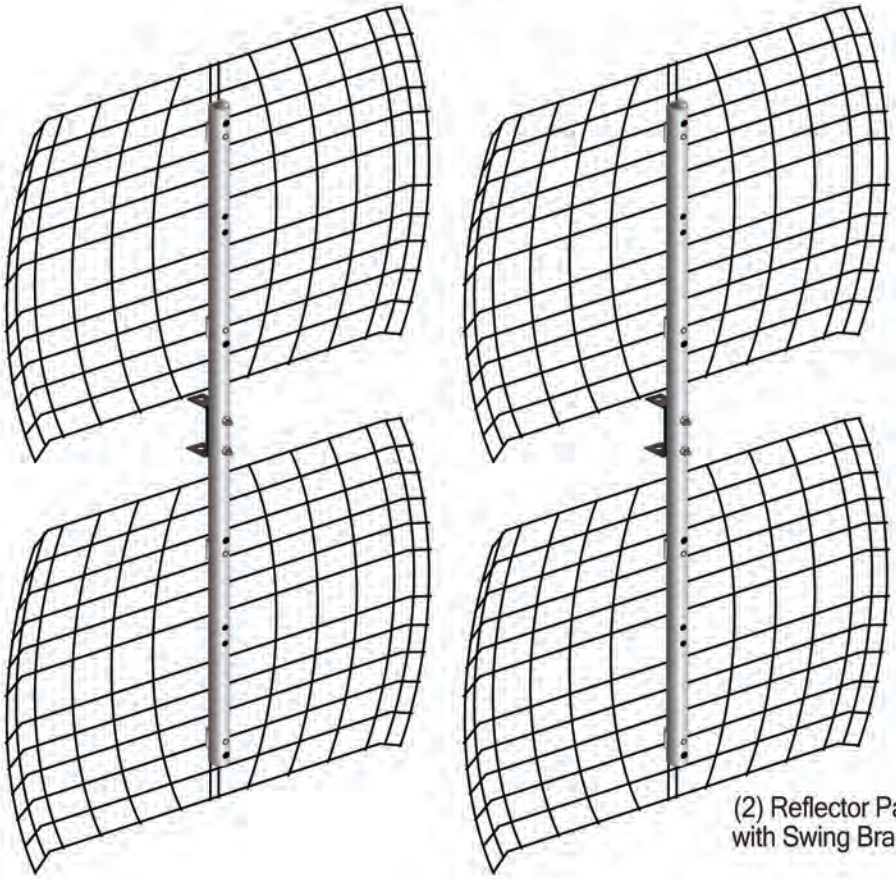

(2) Reflector Panels
with Swing Brackets

Swing Bracket Hardware
(4) Flange Nuts

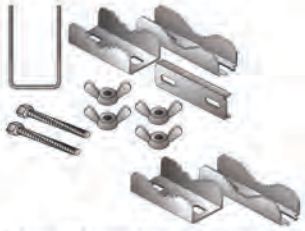

Mast Mounting Hardware
(1) U-Bolt Set, (1) Bolt Set,
(1) Clamp, (4) Wing Nuts

(2) Coaxial Cable
with Pre-installed
Weather Boots

(5) Zip Ties

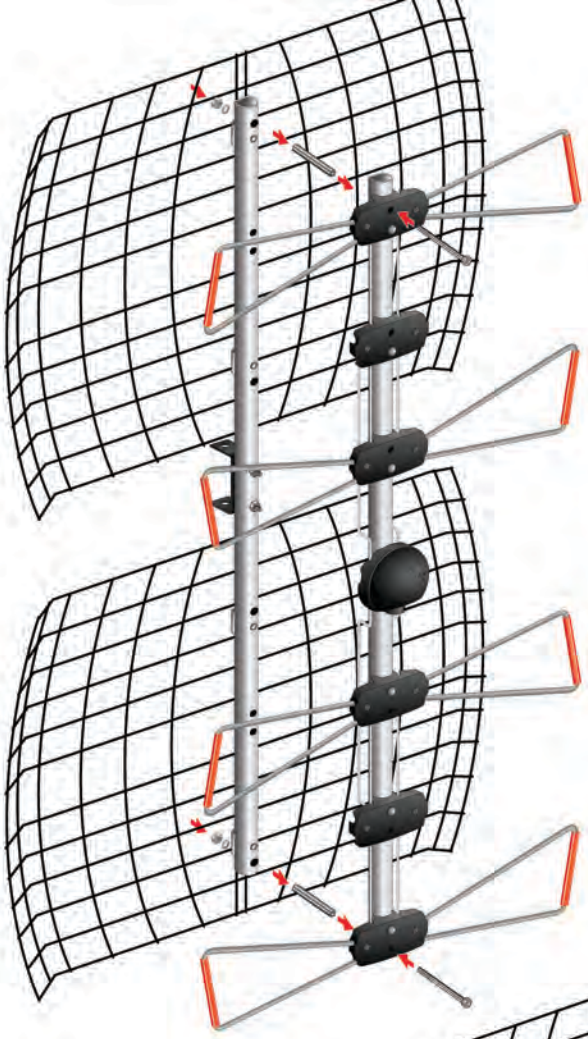

1 Attach Elements to Reflector Panels with hardware.

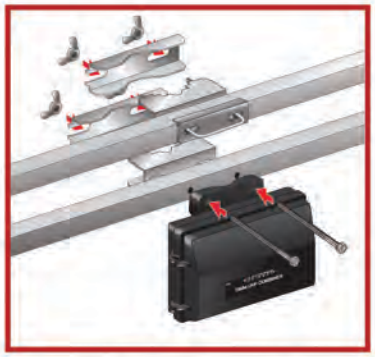

2 Attach Combiner and Mast Clamp to the Cross Bar Mount with factory installed screws pointing upward, then install combiner and mast clamp as shown in drawing.

3 Attach coaxial cables to the Combiner.

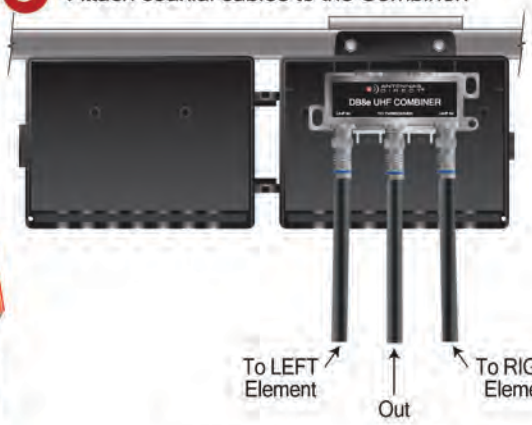

NOTE: Use F-connectors ends for Combiner without Weather Boot. Weather Boot connects to the Bowtie Element.

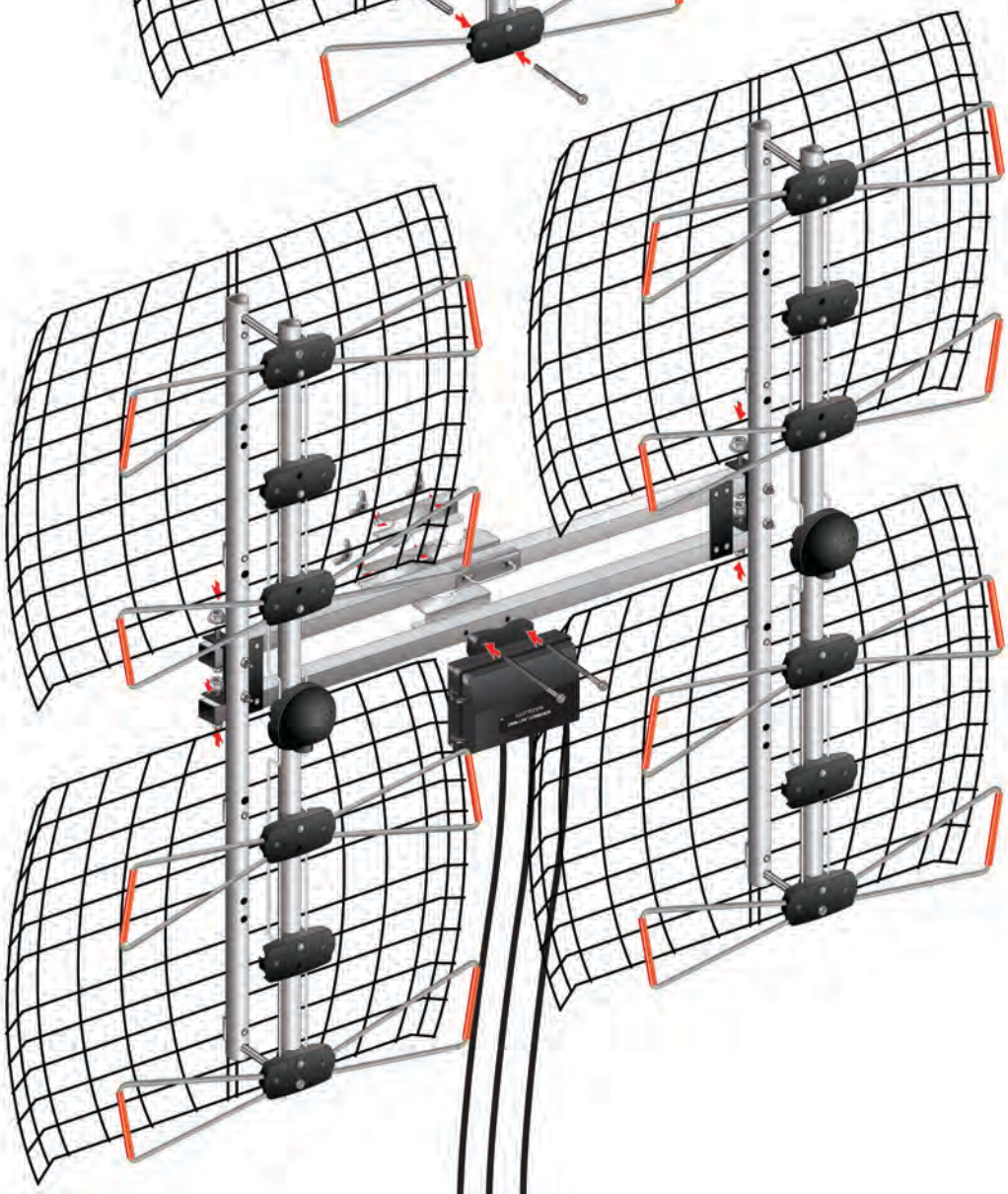

4 With arrows pointing upward on the Cross Bar, attach one panel at a time using nuts with flange side down. Adjust so that Reflector Panels are parallel to Cross Bar. Tighten nuts with wrench.

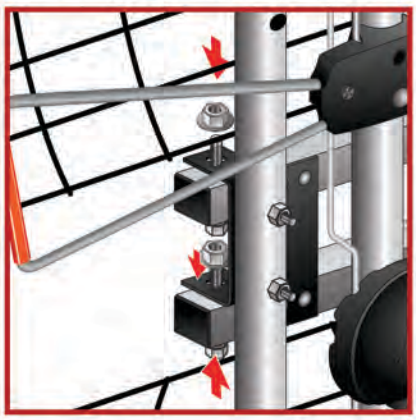

Illustration represents Bowtie Elements and Combiner in forward facing position.

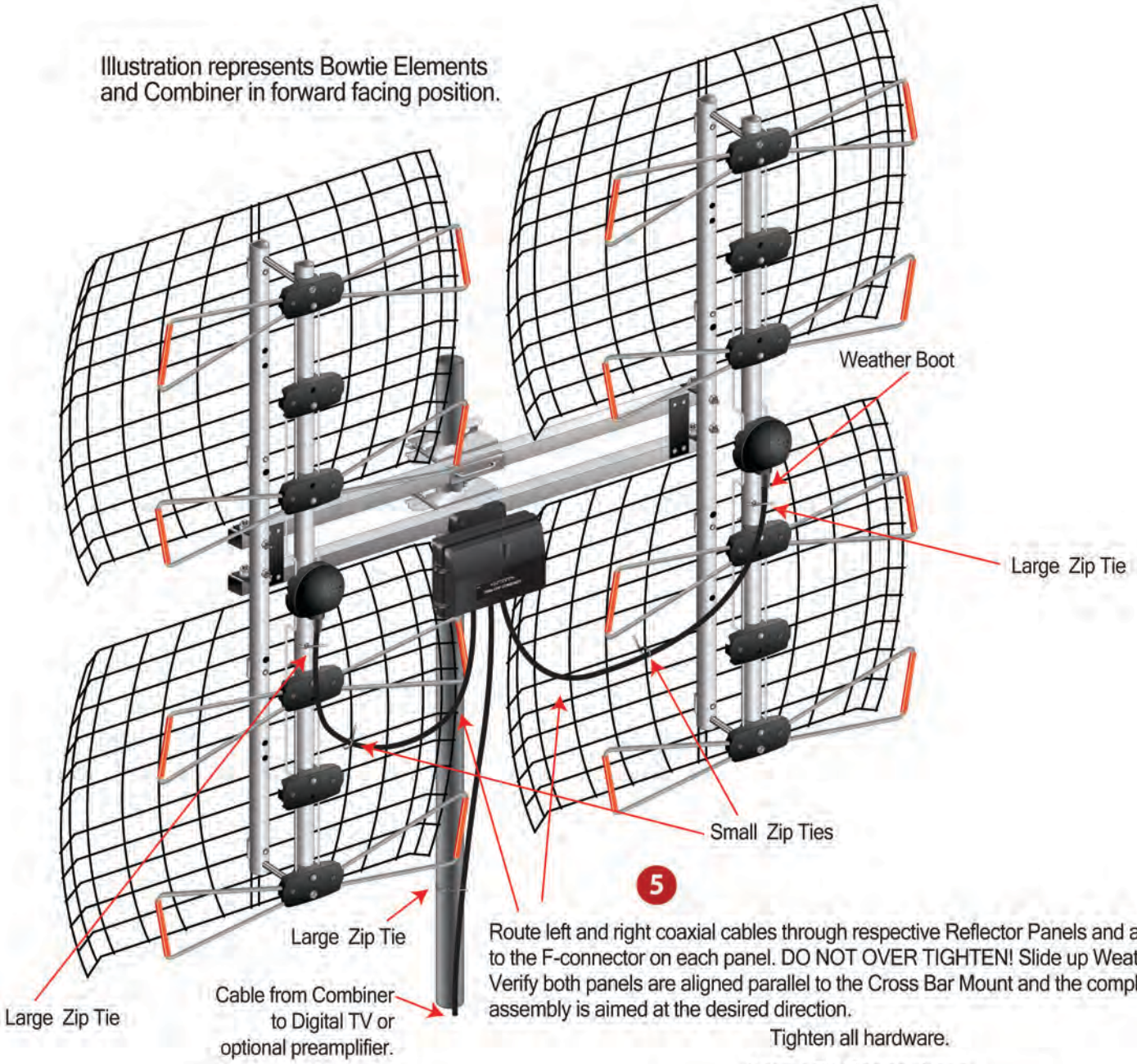

5 Route left and right coaxial cables through respective Reflector Panels and attach to the F-connector on each panel. DO NOT OVER TIGHTEN! Slide up Weather Boots. Verify both panels are aligned parallel to the Cross Bar Mount and the completed assembly is aimed at the desired direction.

Tighten all hardware.

Secure Zip Ties as shown.

DO NOT OVER TIGHTEN SMALL ZIP TIES.

Attach assembled antenna to mast.

Purchase mast separately. Order online: antennasdirect.com

You MUST RESCAN your converter box or TV for reception each time you reposition antenna.

Warning! Keep Away From Power Lines.

Call to Learn. 1-877-825-5572

Technical Assistance is available Monday - Friday, 9:00 am - 9:00 pm and Saturday - Sunday, 10:00 am - 6:00 pm Central Time.

©Antennas Direct 2012 11/12 DB8e

Troubleshooting

Problem: I'm not getting any signals at all.

Possible causes:

1. You MUST RESCAN your converter box or TV.

A TV must be set to the proper input source. Using the TV remote control:

- Go into the setup menu and select the proper source. It may be labeled "antenna', "air", "broadcast" or "cable off". Refer to your TV user's manual.
- Within the setup menu select channel setup or channel scan. Again, you may need to refer to your TV user's manual for exact directions.
- If the initial rescan does not bring in all desired channels, follow the double rescan procedure below:

Disconnect the antenna from the box or digital TV:

- Rescan the box or digital TV without the antenna connected. As with any scan, follow the on-screen instructions or owner's manual for your device.
- Unplug the box or digital TV from the electrical outlet for at least one minute.
- Reconnect the antenna to the box or digital TV and plug the unit into the electrical outlet.
- Rescan the box or digital TV one more time.

Make sure the antenna is facing the broadcast towers in your area. To locate your towers go to www.antennapoint.com or call your local TV stations.

2. You do not have a clear line of sight to your local broadcast towers.

You might need to elevate and/or move your antenna. Using a taller mast may be helpful. You have found the right location for your antenna when all of your local channels appear after a subsequent rescan. Remember, rescan at every location that you try.

3. You are outside of the range of your antenna's capabilities.

Depending upon the distance between you and your local TV broadcast towers you may need a longer range antenna. Antennas Direct offers many models for this purpose.

4. If you have more than one TV connected to the antenna or if your cable line is too long (50+ feet) , you may need an amplifier.

Call our Helpline to be sure this will improve your reception. If amplification is added when NOT needed, reception problems could arise.

5. You may have loose fitting connections along your cable line.

Check ALL connections for tight fit and check all outdoor connections for moisture or corrosion.

6. Building material such as brick, metal or stucco will inhibit signal. Move your antenna near a window facing your broadcast towers

Problem: I'm receiving every channel except for one.

Possible causes:

1. You may need to rescan your TV tuner or converter box.

See item 1.

2. The channel you are not receiving may have its transmitter lower on the broadcast tower than the other transmitters and your line of sight is blocked.

Try elevating your antenna or moving it to another location.

Problem: I'm having signal breakups but I'm only two miles from the transmitter.

Possible causes:

1. Your TV may be receiving interfering signals.

A larger/stronger antenna will not necessarily solve this problem. Consider moving the antenna making sure it is not placed near metal objects or other antennas. If this is not succesful, your signal may be too strong. Call our Helpline for an analysis of your area and installation. We can offer simple solutions.

Call To Learn. Don't Return.

For Tower Locations: antennapoint.com

Input On Antenna Mode

Scanning is a Must When in Doubt, Rescan

HELPLINE: 1-877-825-5572

Antennas Direct Inc.
Lifetime Limited Warranty

Antennas Direct® Inc. warrants this product against any defects in materials or workmanship for as long as you own the product. No warranty claim will be honored unless at the time the claim is made you present proof of purchase from an authorized Antennas Direct Inc. dealer.

Antennas Direct Inc. will either repair or replace the defective product at no charge to you. This warranty covers parts, but does not cover any costs incurred in removal or reinstallation of the product. This limited warranty does not apply if the product is damaged or fails from: misuse, improper installation, abuse, and modification of the product as originally manufactured by Antennas Direct.

Antennas Direct Inc. will not assume any liabilities for any other warranties, expressed or implied by any other person. The foregoing shall be the sole and exclusive remedy of any person, whether in contract, tort or otherwise, and Antennas Direct Inc. shall not be liable for incidental or consequential damage or commercial loss, or from any other loss or damage as set forth above.

16388 Westwoods Business Park, St. Louis, MO 63021