FOREMOST®



Ⓦ White

SQUARE VESSEL SINK

Model# 13-0065-4W	HD SKU# 924-111	INTERNET# 204465523

White Grade A vitreous china

High gloss finish

Easy to clean

Designed for above-counter installation

Limited lifetime warranty

Overall Dimensions: 17.3"W x 17.3"D x 7.8"H

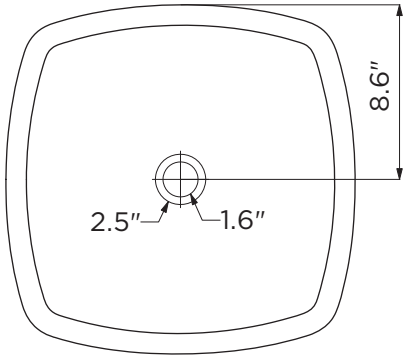

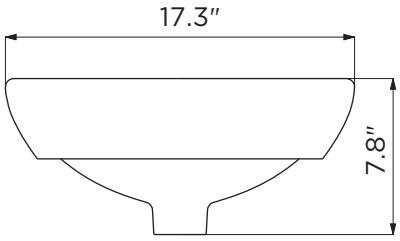

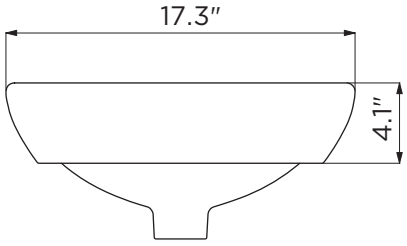

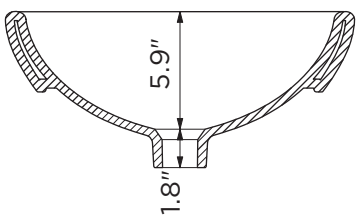

Copyright © 2016 Foremost Groups, Inc. All Rights Reserved. All dimensions are subject to change and variation without notice.