

B12185-6032L-WH
B12185-6032R-WH
Left Drain Shower Base Shown

Submitted Model No.:_____

Specific Features:_____

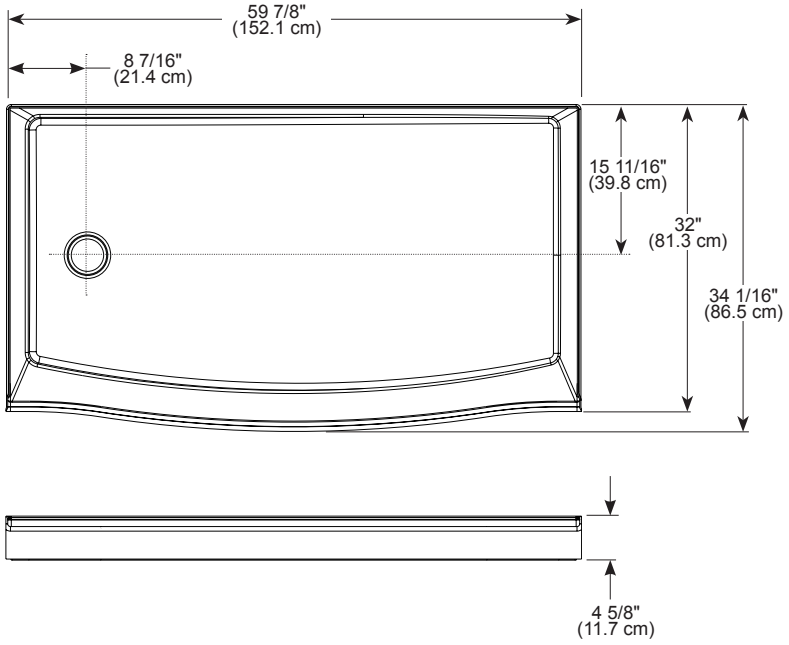

DELTA

see what Delta can do℠

60" X 32" CURVED SHOWER BASE

- Classic 500™
- Right Drain or Left Drain

STANDARD SPECIFICATIONS:

- Caulkless Installation when used with matching wall set
- Direct-to-stud installation
- Made with High-Gloss ProCrylic™ Material
- Textured Bottom
- Uses Standard Shower Stall Drain with 4 1/4" Strainer
- 10 Year Limited Residential Warranty
- 1 Year Limited Commercial Warranty

COLOR/FINISH

- White

COMPLIES WITH:

- CSA B45.5/IAPMO Z124

Delta Faucet Company
55 E. 111th Street, Indianapolis, IN 46280
350 South Edgeware Road, St. Thomas, ON N5P 4L1
© 2023 Delta Faucet Company