ASSEMBLY INSTRUCTION

Parts

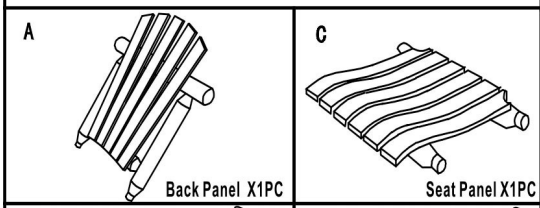

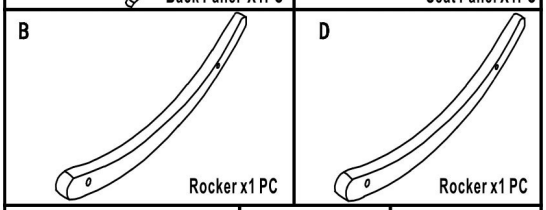

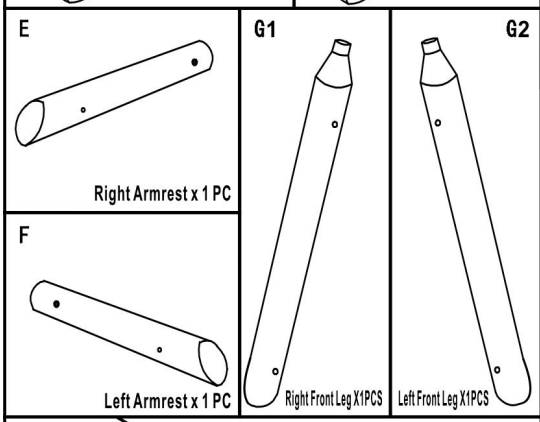

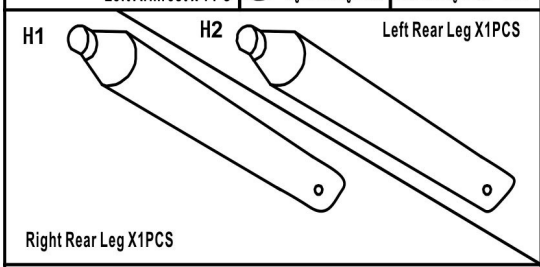



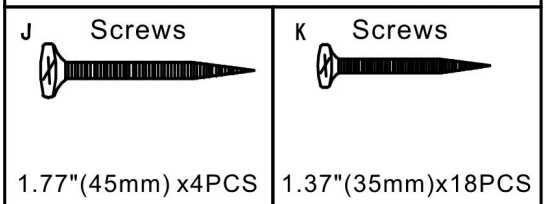

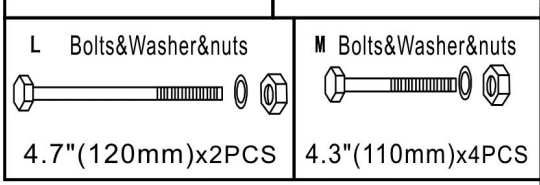

Tools Required (not included)

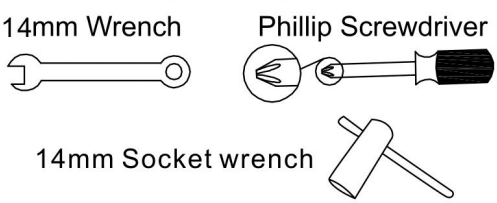

Assembly

STEP:1

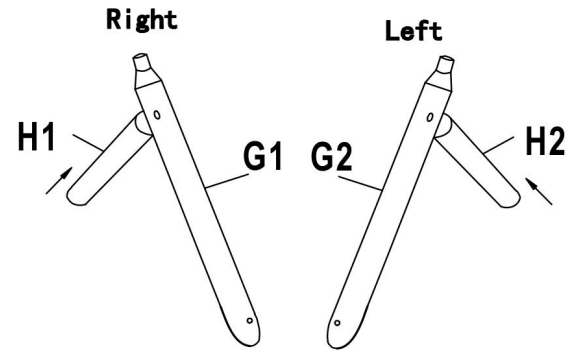

Do not fix any screws until step 2

STEP:2

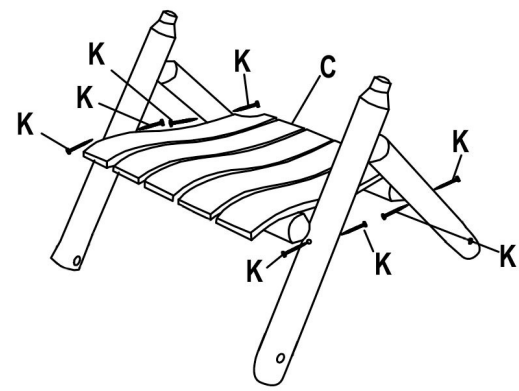

K=8PCS

STEP:3

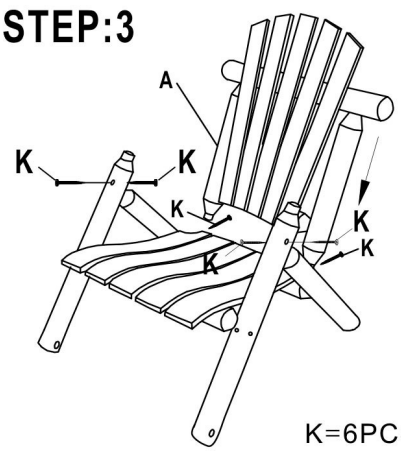

K=6PCS

STEP:4

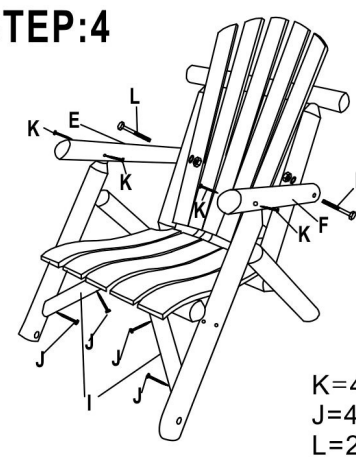

K=4PCS
J=4PCS
L=2PCS

STEP:5

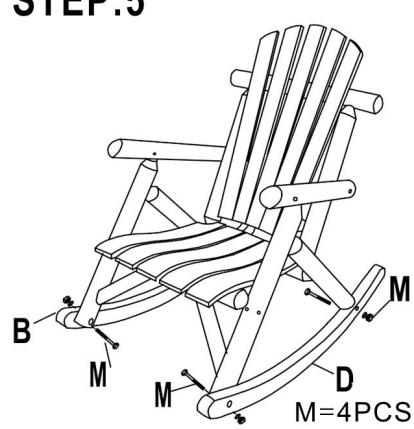

M=4PCS

STEP:6

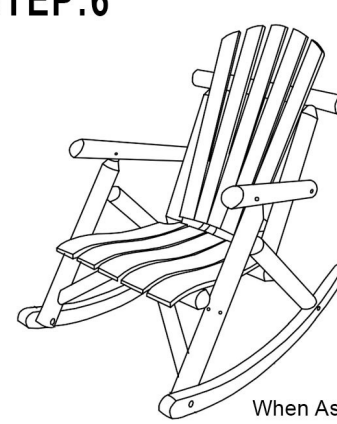

When Assembled