SHOWER DOOR

SLIDING CONTEMPORARY STYLE TUB TRACK 60"

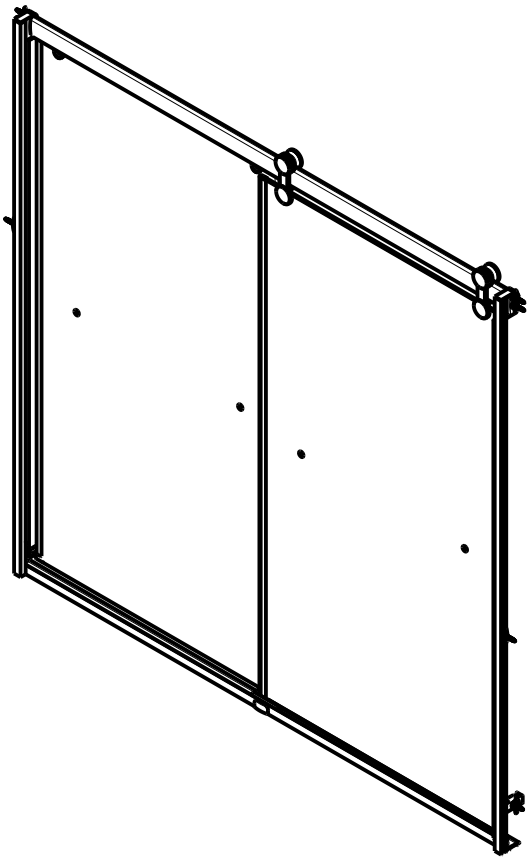

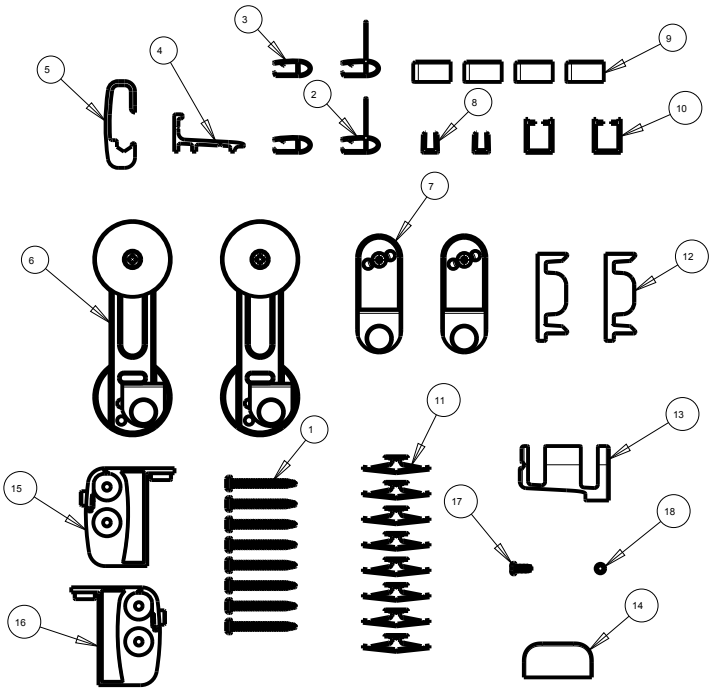

ID	DESCRIPTION	QTY	MATERIAL
1	#8-18 X 1.5" LONG PHILLIPS HEAD	8	SS
2	BLADE SEAL - TUB	2	PVC
3	BUBBLE SEAL - TUB	2	PVC
4	MOD BOTTOM TRACK	1	AL6463
5	CONT. GLAZING TOP TRACK	1	AL6463_T5
6	UPPR ROLLR ASS'Y CONT GLAZING	2	ASSEMBLY
7	CONT. GLAZ LOW'R ROLL'R ASS'Y	2	ASSEMBLY
8	6.0mm GLAZING EXTRUSION	2	TRITAN_TX1001
9	6.0mm GLAZING END	4	TRITAN_TX1001
10	CONTEMP. SIDE JAMB TUB	2	AL6463_T5
11	TOGGLE WALL ANCHOR	8	POLYPROPYLENE
12	COTEMPORARY DOOR BUMPER GLAZING	2	PVC
13	GLAZIN CENTER GUIDE 6mm EXPOSED ROLLER	1	NYLON
14	MOD CENTER GUIDE OVER	1	NYLON
15	MOUNTING BRACKET LEFT	1	ASSEMBLY
16	MOUNTING BRACKET RIGHT	1	ASSEMBLY
17	#6 x 3/8 TYPE BT SS	1	SS
18	MOD NYLON O RING	1	NYLON

MATERIAL: Anodized Aluminum Extrusions (Track) and Zinc Die Cast (Mounting Brackets).
Bronze Finish and Matte Black are Powder Coated.

INSTALLATION: Detailed Instructions, Templates and Hardware Included for Easy Installation.

UNIQUE FEATURE: Constructed of Corrosion Resistant Anodized Aluminum.
60″ Track Assembly Kit
Fits 60″ Shower Doors with an Opening min/max of 50 1/8" - 58 1/2" (127cm-149cm), with a Height of 60 3/4" (154.3cm).

NOTE: Height of 61 3/4" (157cm) Required for installation
Compatible with all 1/4" (6mm) Delta Shower Glass

WARRANTY: 5 Year Limited Warranty.

DELTA

see what Delta can do

Liberty Hardware Manufacturing Corporation • 140 Business Park Drive • Winston-Salem, NC 27107 • 1.800.964.4850 • www.deltashowerdoors.com
©2020 LHMC, A Masco Company

TECHNICAL DATA

Shower Door

SLIDING BATHUB
60″ GLASS PANEL

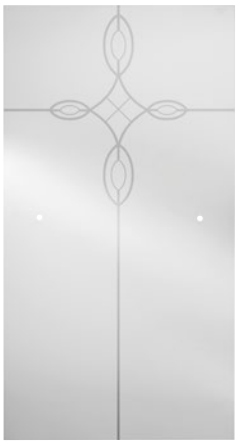

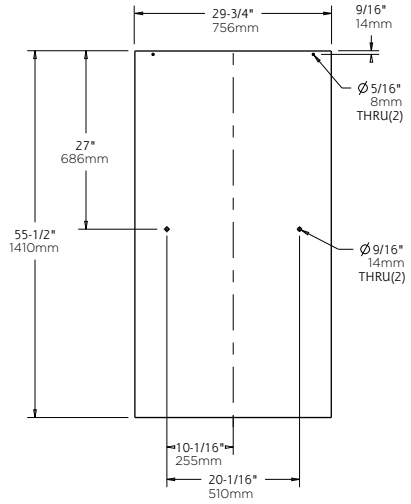

MATERIALS: 1/4″ (6mm) Tempered Glass Panel.

INSTALLATION: Detailed Instructions and Hardware Included for Easy Installation.

UNIQUE FEATURE: Spot Guard Easy Clean Coating.
Traditional: Fits Doors with an Opening min/max of 50 1/8″ – 59 3/8″ (127cm-151cm), with a Height of 58 1/8″ (148cm)
Contemporary: Fits Doors with an Opening min/max of 50 1/8″ – 58 1/2″ (127cm-149cm), with a Height of 58 3/4″ (149cm)
Mod: Fits Doors with an Opening min/max of 50 1/8″ – 58 1/2″ (127cm-149cm), with a Height of 59″ (150cm)

WARRANTY: 5 Year Limited Warranty.

Liberty Hardware Manufacturing Corporation • 140 Business Park Drive • Winston-Salem, NC 27107 • 1.800.964.4850 • www.deltashowerdoors.com ©2019 LHMC, A Masco Company

TECHNICAL DATA

Shower Door

SIMPLICITY HANDLE WITH KNOBS

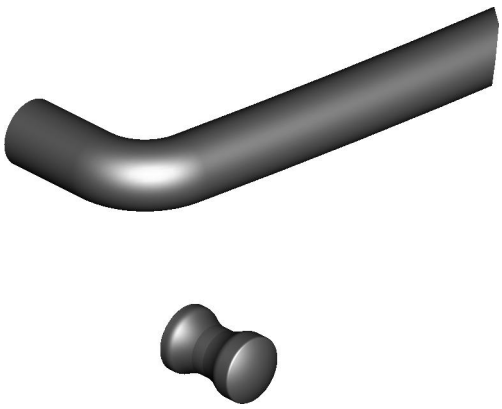

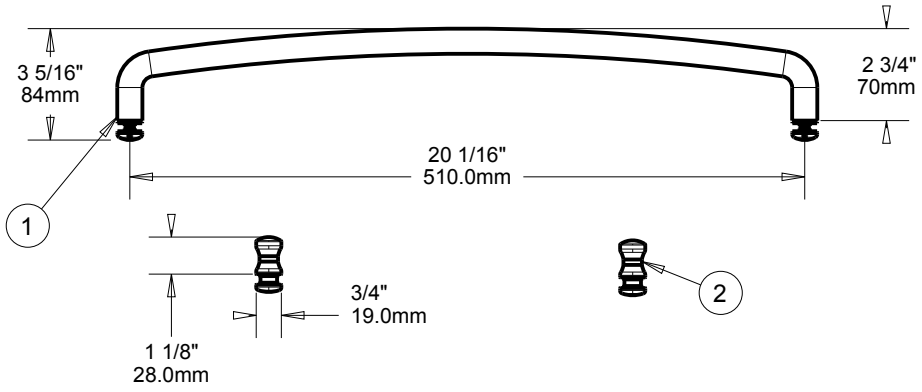

MATERIALS: Aluminum Bar. Zinc Knobs (Brushed Nickel and Oil Rubbed Bronze), Aluminum Knobs (Chrome).

INSTALLATION: Detailed Instructions and Hardware Included for Easy Installation.

UNIQUE FEATURE: Coordinates with Delta® Faucets and Bath Hardware. Compatible with all Delta® Sliding Bathtub or Shower Doors.

WARRANTY: 5 Year Limited Warranty.

©2018 LHMC, A Masco Company