Form No. 3441-858 Rev A

TORO®

Count on it.

Parts Catalog

Flex-Force Power System™ 60V MAX 22in

Recycler® Lawn Mower

Model No. 21466T—Serial No. 400000000 and Up

Register at www.Toro.com.
Original Instructions (EN)

3441-858 A

Ordering Replacement Parts

To order replacement parts, please supply the part number, the quantity, and the description of each part desired.

Understanding Reference Numbers

Each identified part in an illustration has a reference number. The reference number for a part also appears in the parts list, along with other information about the part.

This catalog uses two special reference number formats, one to indicate parts in a service assembly and another to indicate the quantity of a given part in an illustration.

Service Assembly Reference Numbers

Parts in service assemblies have reference numbers in the form a:b. The a represents the reference number of the entire service assembly and the b represents a sequential number unique to each part within the service assembly.

For example, a wheel assembly might be identified by reference number 6, the tire by 6:1, the valve by 6:2, and the wheel by 6:3. When you order the assembly identified by reference number 6, you receive all parts identified by reference numbers 6:1,6:2, and 6:3. However, you may also order any part individually. Reference numbers of this type appear in illustration and in parts lists.

Reference Numbers Indicating Quantity

In an illustration, if a reference number indicates more than one part, the reference number has the form nX y. The n represents the quantity of the part, the X is the multiplication symbol, and the y represents the reference number.

For example, in an illustration, the reference number 2X 37 means that two of the parts identified by reference number 37 are indicated.

Contents

Housing Assembly 4
Rear Bag Assembly 6
Decal Assembly 8
Motor Module and Blade Assembly 10
Motor Module No. 140-4125 Lower Shroud Assembly 12
Motor Module No. 140-4125 Upper Shroud Assembly 14
Front Wheel and HOC Assembly 16
Rear Wheel and Height-of-Cut Assembly 18
Handle Assembly 20
Electric Starter Assembly 22
Attachments and Accessories 24

© 2020—The Toro® Company
8111 Lyndale Avenue South
Bloomington, MN 55420

Contact us at www.Toro.com.
Printed in the USA.
All Rights Reserved

Housing Assembly

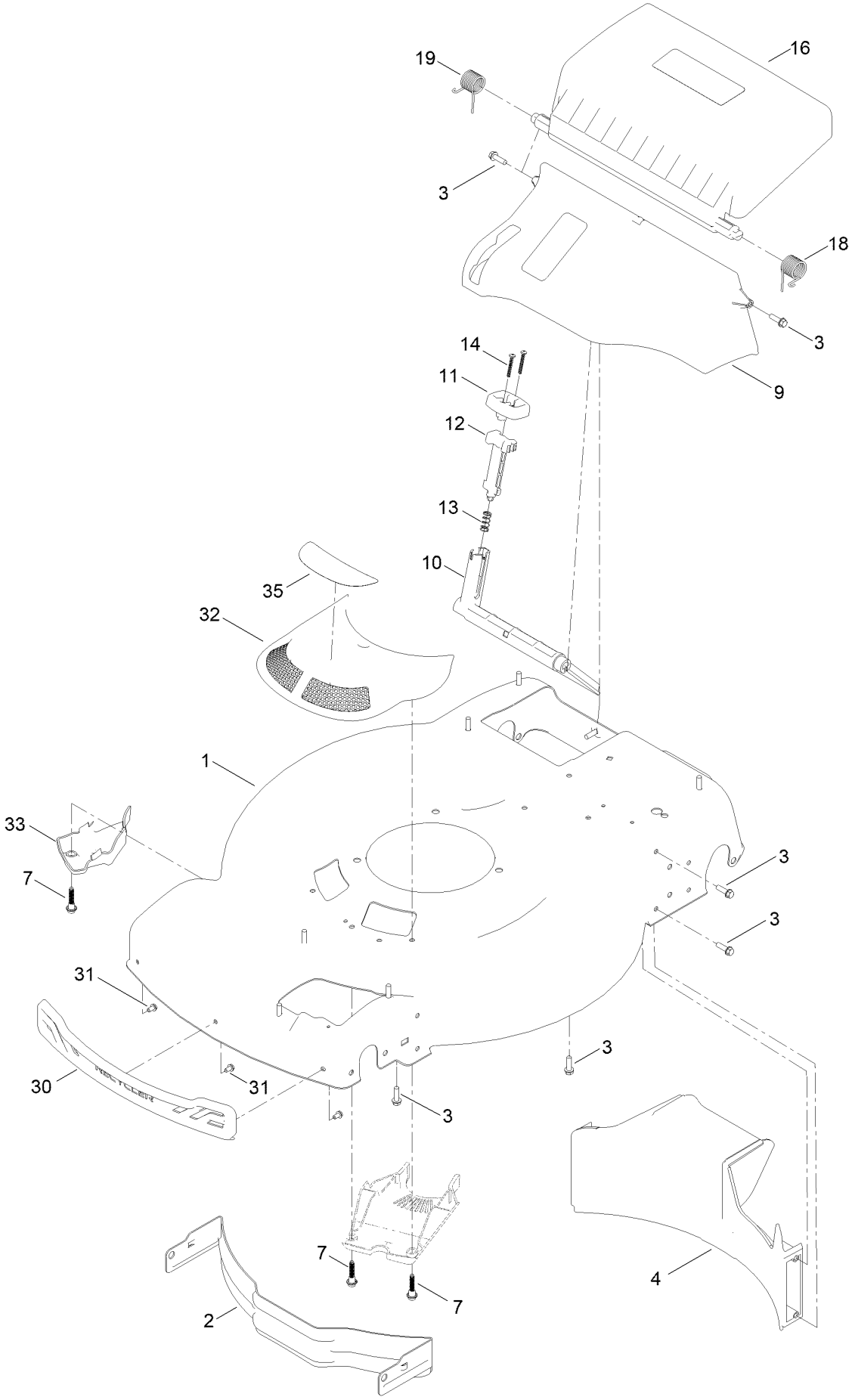

Housing Assembly (continued)

Ref.	Part Number	Qty.	Description
1	144-3192	1	Housing ASM
2	114-7963-01	1	Baffle-Front
3	46-8091	13	Screw-HWH
4	139-5440	1	Baffle-Rear, Rwd
7	131-0837	1	Screw-Shoulder, HHF
9	140-2368	1	ASM-Chute, In Mold
10	139-5443	1	Deflector-Recycle
11	139-5444	1	Knob-Recycle
12	139-5445	1	Latch-Recycle
13	140-4192	1	Spring-Compression
14	32104-120	2	Screw-PPH
16	140-2396	1	ASM-Rear Door, In-Mold (60V)
18	139-5478	1	Spring-Torsion, LH
19	139-5479	1	Spring-Torsion, RH
30	139-5457	1	Bumper-Front
31	139-5467	3	Screw-Plastic, HWH
32	144-0210	1	ASM-Intake, Rwd
33	140-2384	1	Cover-Intake, Bottom
35	144-3182	1	Decal-60V Vortex Technology

Rear Bag Assembly

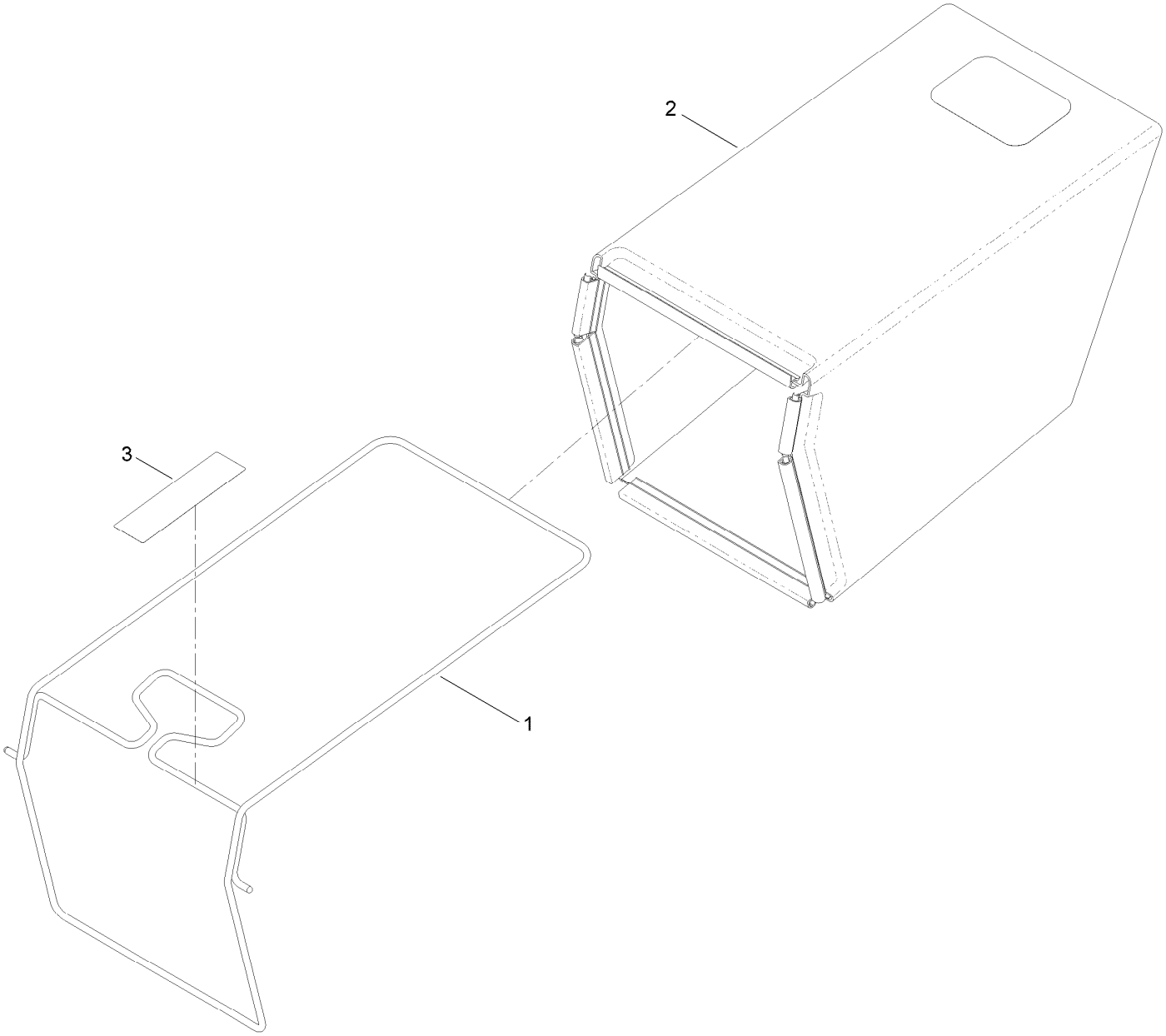

Rear Bag Assembly (continued)

Ref.	*Part Number*	*Qty.*	*Description*
1	139-5470-03	1	ASM-Frame, Bag
2	139-5471	1	ASM-Bag, Grass
3	139-8986	1	Decal-Warning (Bag)

Decal Assembly

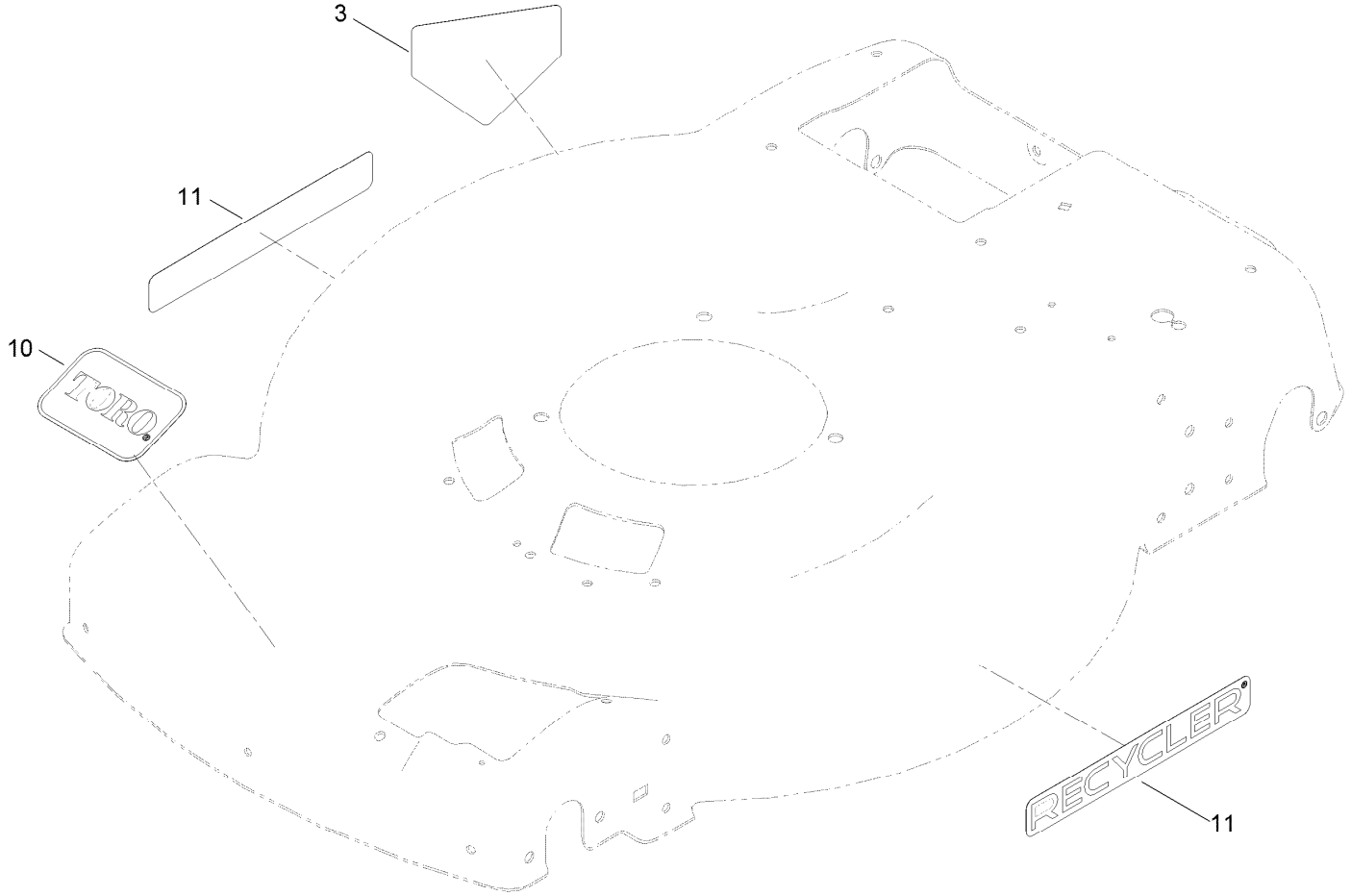

Decal Assembly (continued)

Ref.	Part Number	Qty.	Description
3	94-8072	1	Decal-Danger
10	140-4183	1	Decal
11	140-4184	2	Decal

Motor Module and Blade Assembly

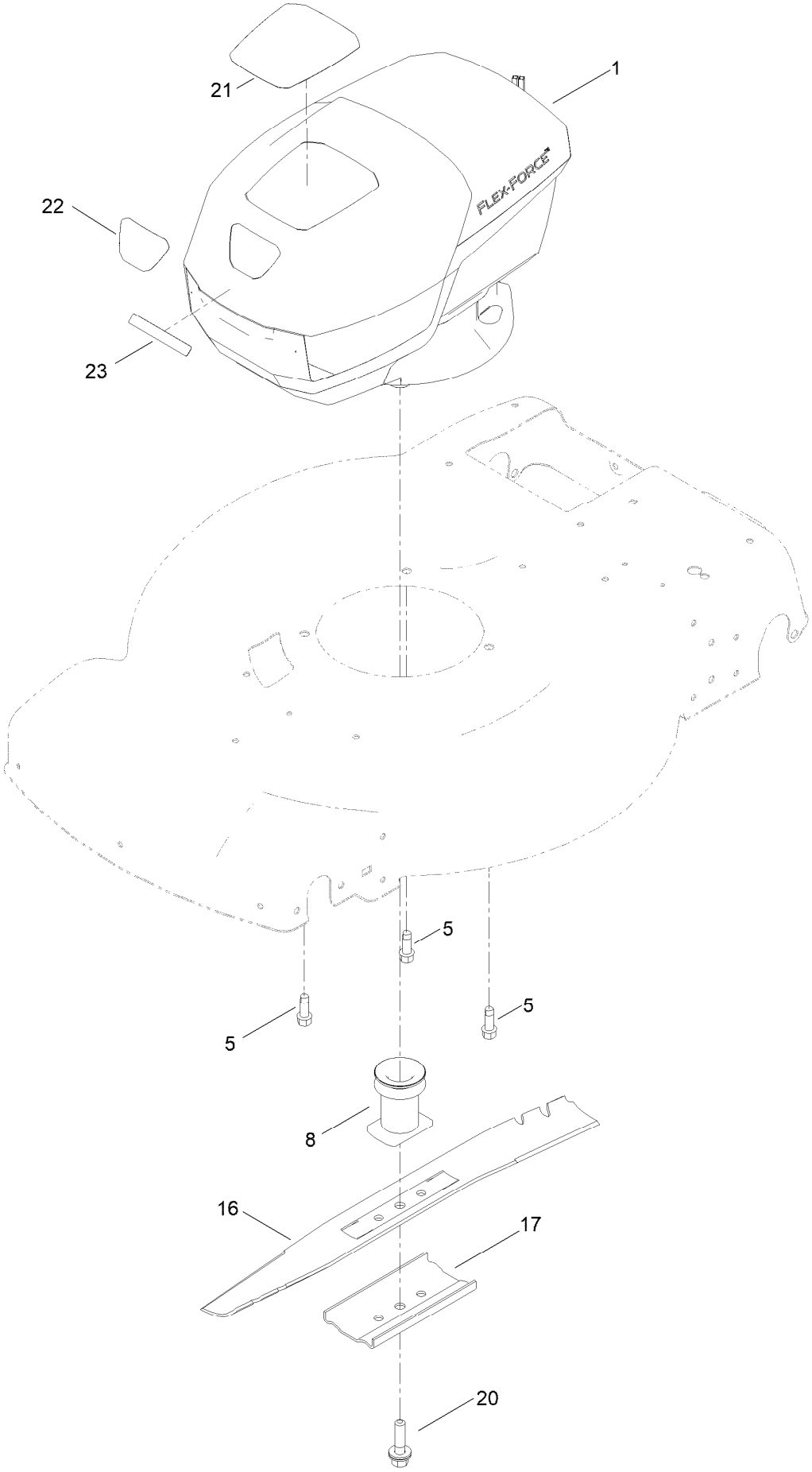

Motor Module and Blade Assembly (continued)

Ref.	Part Number	Qty.	Description
1	140-4125	1	Motor Module 60V
5	121-5844	3	Screw-Thd Form, HWH
8	139-1816	1	Driver-Blade
16	144-3177-03	1	Blade [black]
17	108-3766-03	1	Support-Blade
20	125-2466	1	Bolt-Blade
21	140-4190	1	Decal
22	140-4191	1	Decal
23	144-3183	1	Decal

Motor Module No. 140-4125
Lower Shroud Assembly

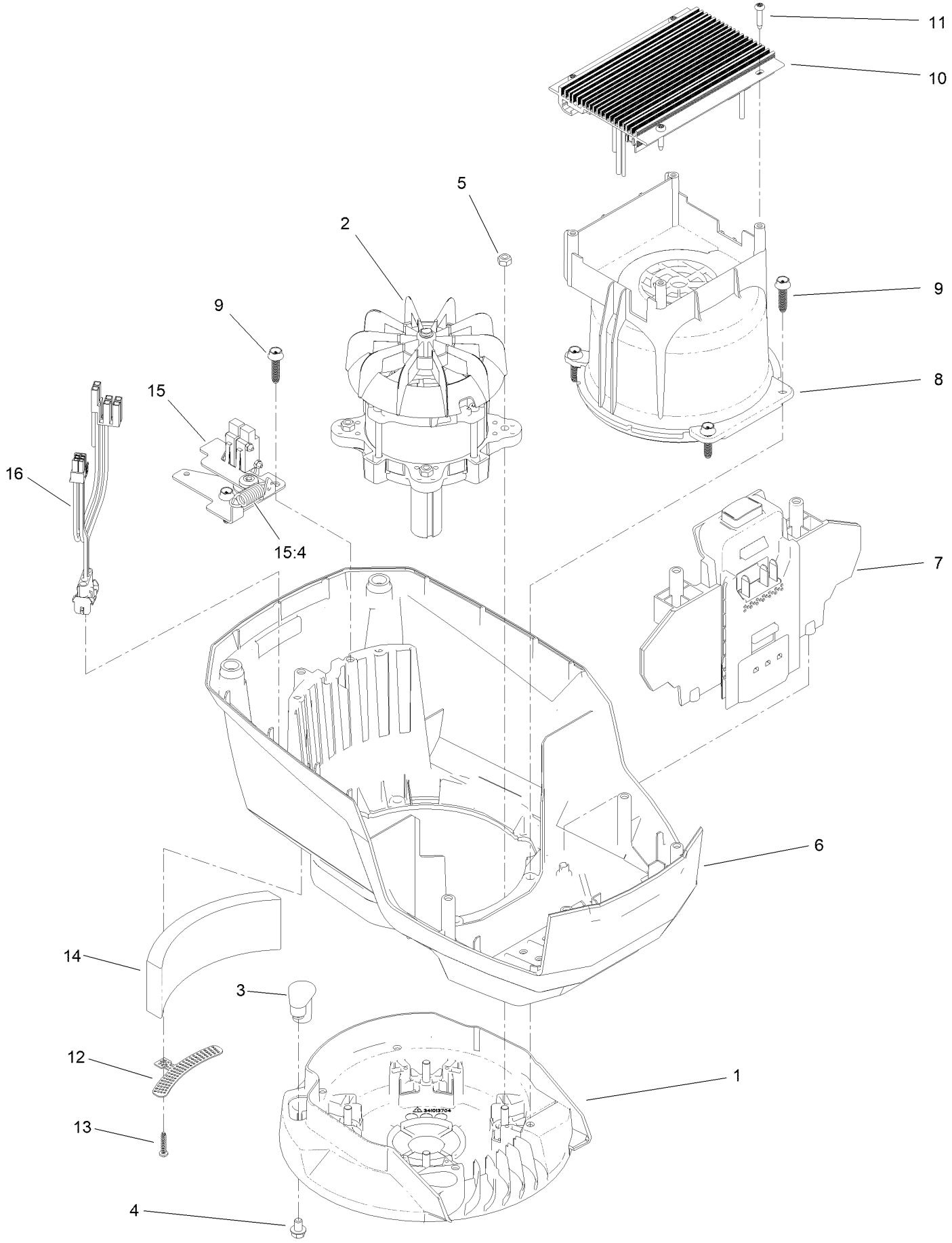

Motor Module No. 140-4125
Lower Shroud Assembly (continued)

Ref.	Part Number	Qty.	Description
1	139-6628	1	Base-Mount, Motor
2	140-4119	1	Motor-2Kw
3	131-9732	3	Insert-Mount, Motor
4	137-4795	3	Screw
5	115-7373	4	Nut-Lock
6	139-6631	1	Shroud-Lower
7	139-6632	1	Battery Reciever ASM
8	139-6633	1	Shroud-Motor
9	130-6658	6	Screw-Flange, Plastic
10	140-4164	1	Controller-Motor
11	139-6642	4	Screw
12	139-6635	1	Bracket-Foam
13	138-3273	1	Screw-Plastic, PPH
14	139-6636	1	Foam
15	133-1918	1	Bail Switch ASM
15:4	104-6478	1	Spring-Extension
16	139-6637	1	Harness-Wire

Motor Module No. 140-4125
Upper Shroud Assembly

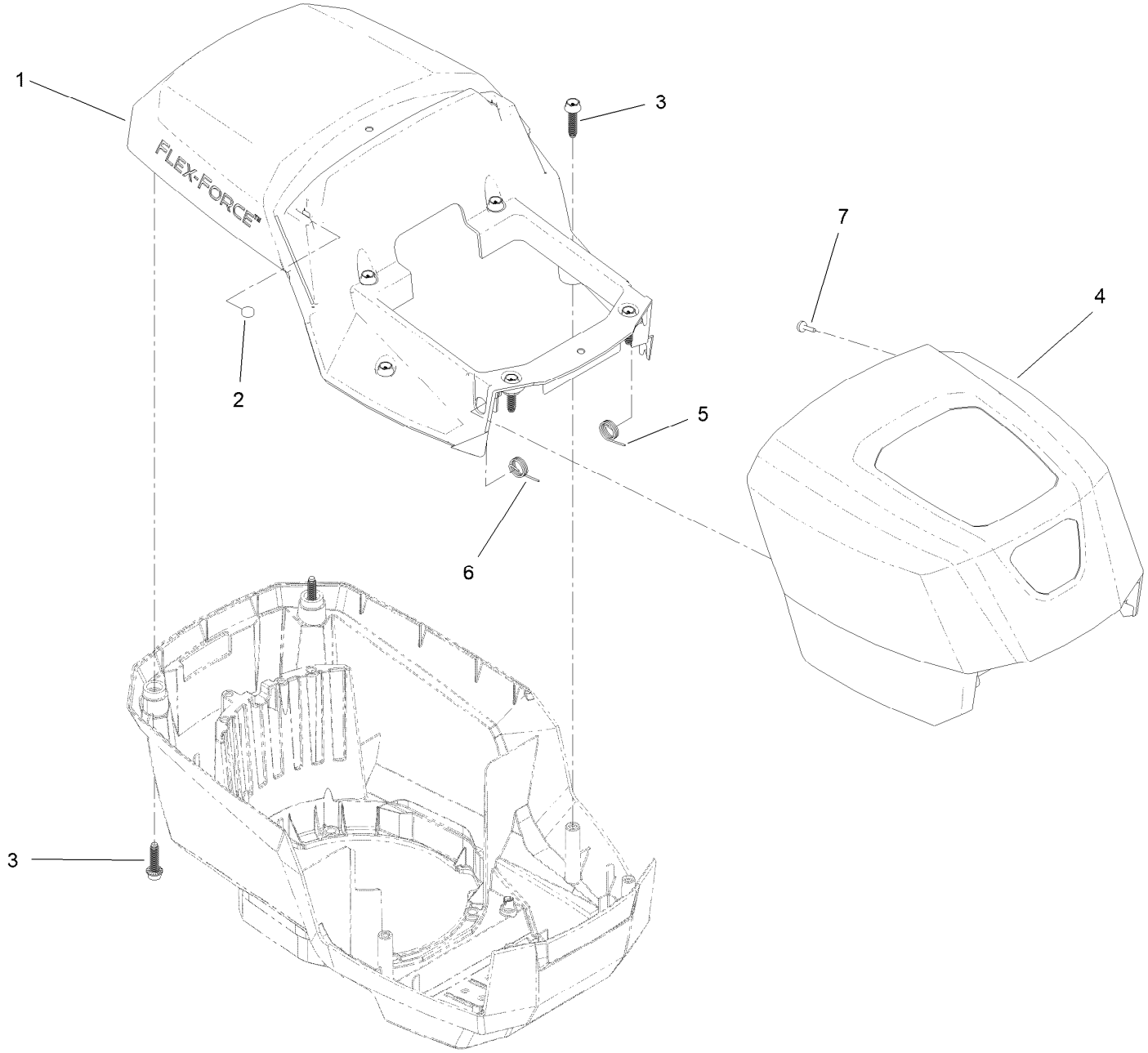

Motor Module No. 140-4125
Upper Shroud Assembly (continued)

Ref.	Part Number	Qty.	Description
1	139-6638	1	Shroud-Upper
2	114-5896	2	Magnet
3	130-6658	8	Screw-Flange, Plastic
4	139-6639	1	Hood
5	139-6640	1	Spring-LH
6	139-6641	1	Spring-RH
7	95-4234	2	Screw-PPH

Front Wheel and HOC Assembly

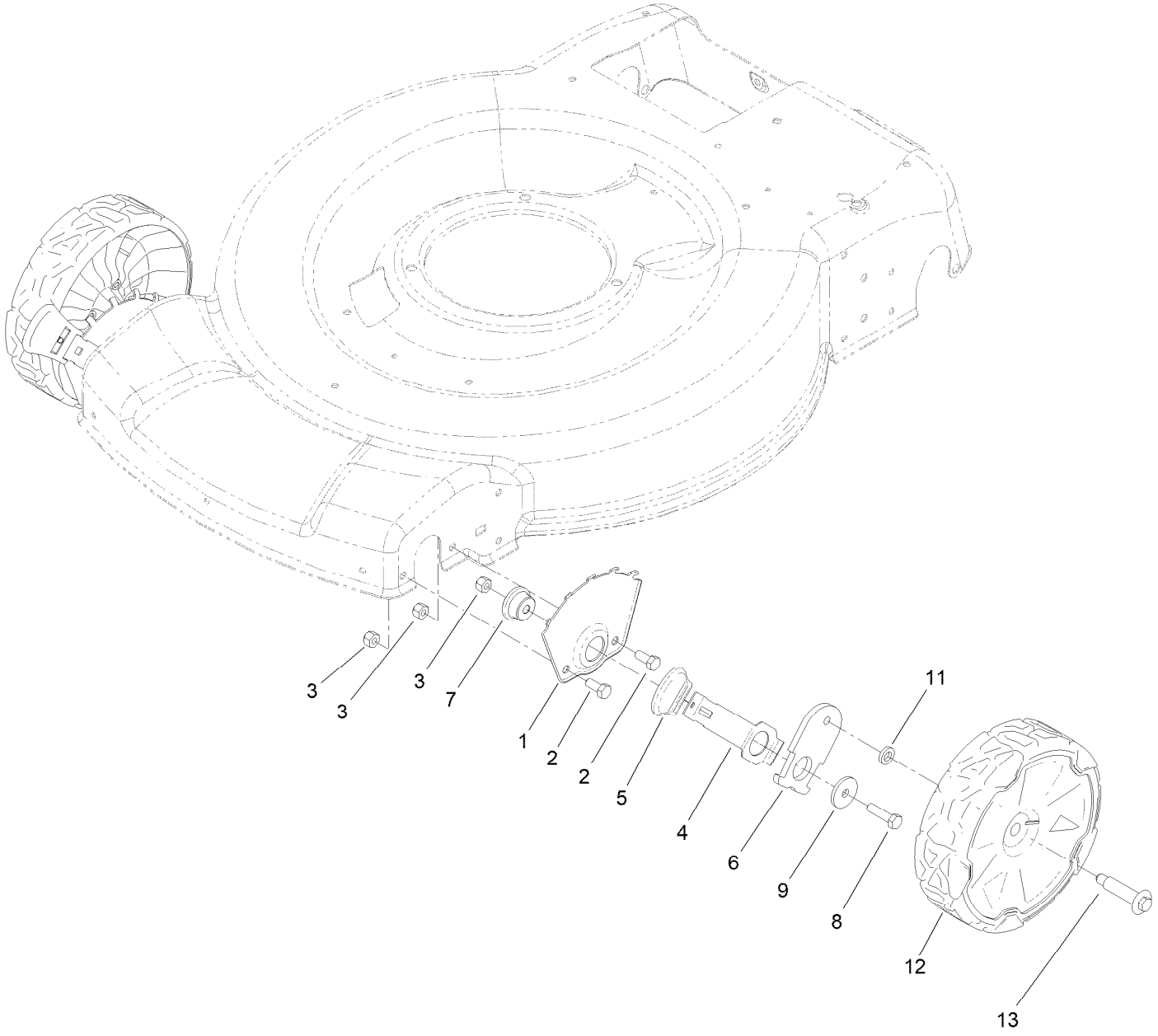

Front Wheel and HOC Assembly (continued)

Ref.	Part Number	Qty.	Description
1	115-1956-05	2	Plate-HOC,Front Fsvq Wednesday
2	322-3	4	Screw-HH
3	3296-29	6	Nut-Lock, NI
4	105-1809	2	Arm-Spring
5	110-0549	2	Knob-HOC
6	137-9128	2	Arm-Pivot, Front
7	105-1818	2	Bushing-Mount, HOC
8	322-6	2	Screw-HH
9	105-3048	2	Washer-Flat
11	139-5449	2	Washer-Wheel Bolt
12	140-2355	2	ASM-8" Wheel, Idler
13	139-1789	2	Wheel Bolt

Rear Wheel and Height-of-Cut Assembly

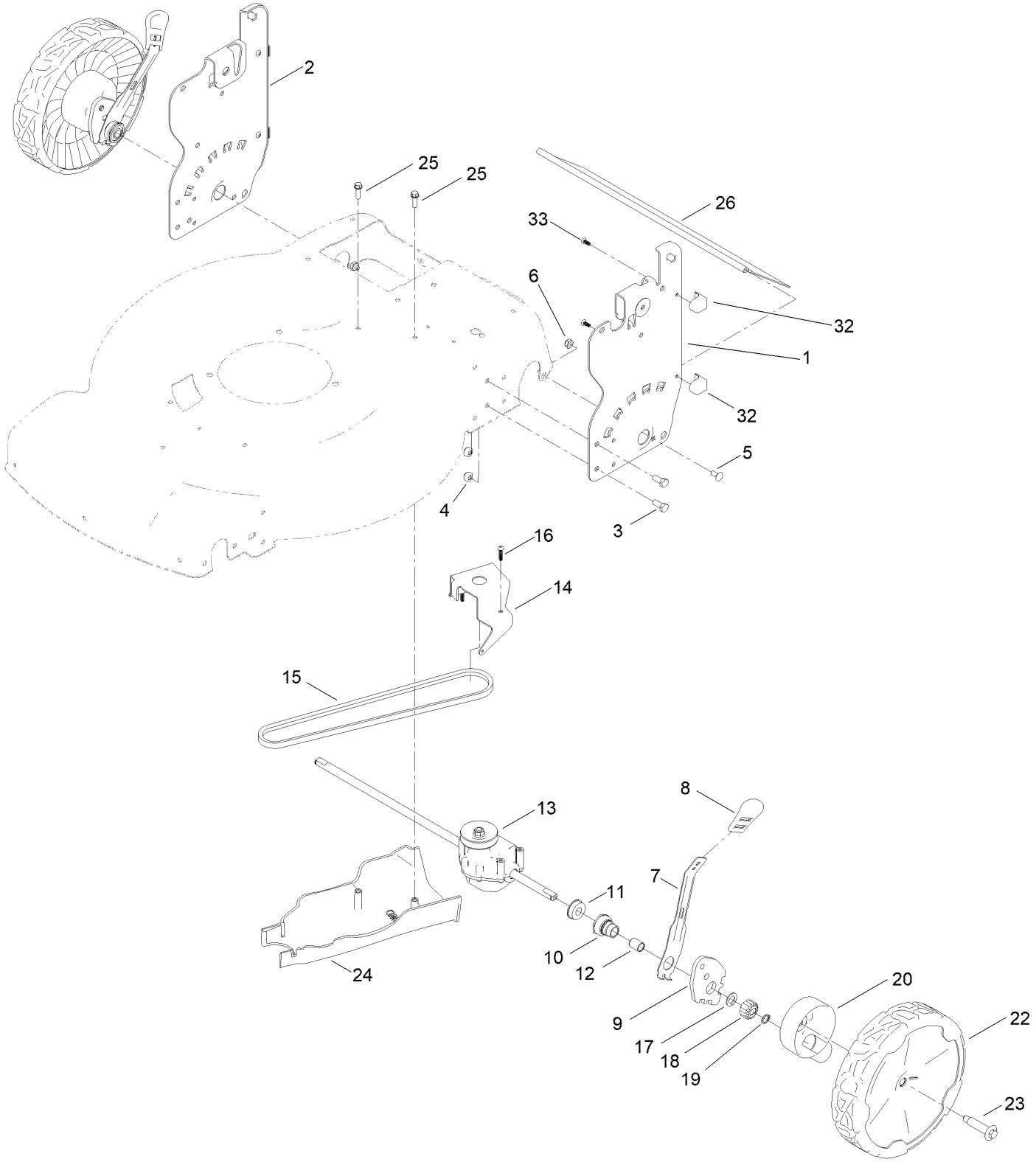

Rear Wheel and Height-of-Cut Assembly (continued)

Ref.	Part Number	Qty.	Description
1	139-6593-05	1	Plate-HOC, LH (2 Hole)
2	139-6592-05	1	Plate-HOC, RH (2 Hole)
3	322-3	4	Screw-HH
4	3296-29	4	Nut-Lock, NI
5	3229-11	2	Screw-CARR
6	3296-16	2	Nut-Lock, NI
7	132-4486	2	Arm-Spring
8	110-0549	2	Knob-HOC
9	139-5451	2	Arm-Pivot, Rear
10	108-9779	2	Retainer-Bushing, HOC
11	104-8699	2	Bearing-Ball
12	108-9782	2	Bushing-Sleeve
13	139-6561	1	Transmission-Rwd
14	114-7977-03	1	Bracket-Transmission
15	140-4041	1	V-Belt
16	108-7476	3	Screw-Plastite
17	110-7191	2	Washer-Thrust
18	131-5399	2	Gear-Pinion, 15T
19	32151-61	2	Ring-Retaining
20	140-2362	2	ASM-Cover, Gear (Dk Gray)
22	140-2350	2	ASM-9.65" Wheel, Geared
23	139-1789	2	Wheel Bolt
24	139-5448	1	Cover-Belt, Rwd
25	46-8091	2	Screw-HWH
26	139-6597	1	Shield-Trailing
32	140-2369	4	Pad-Smart Stow
33	107-7461	4	Screw-Plastite

Handle Assembly

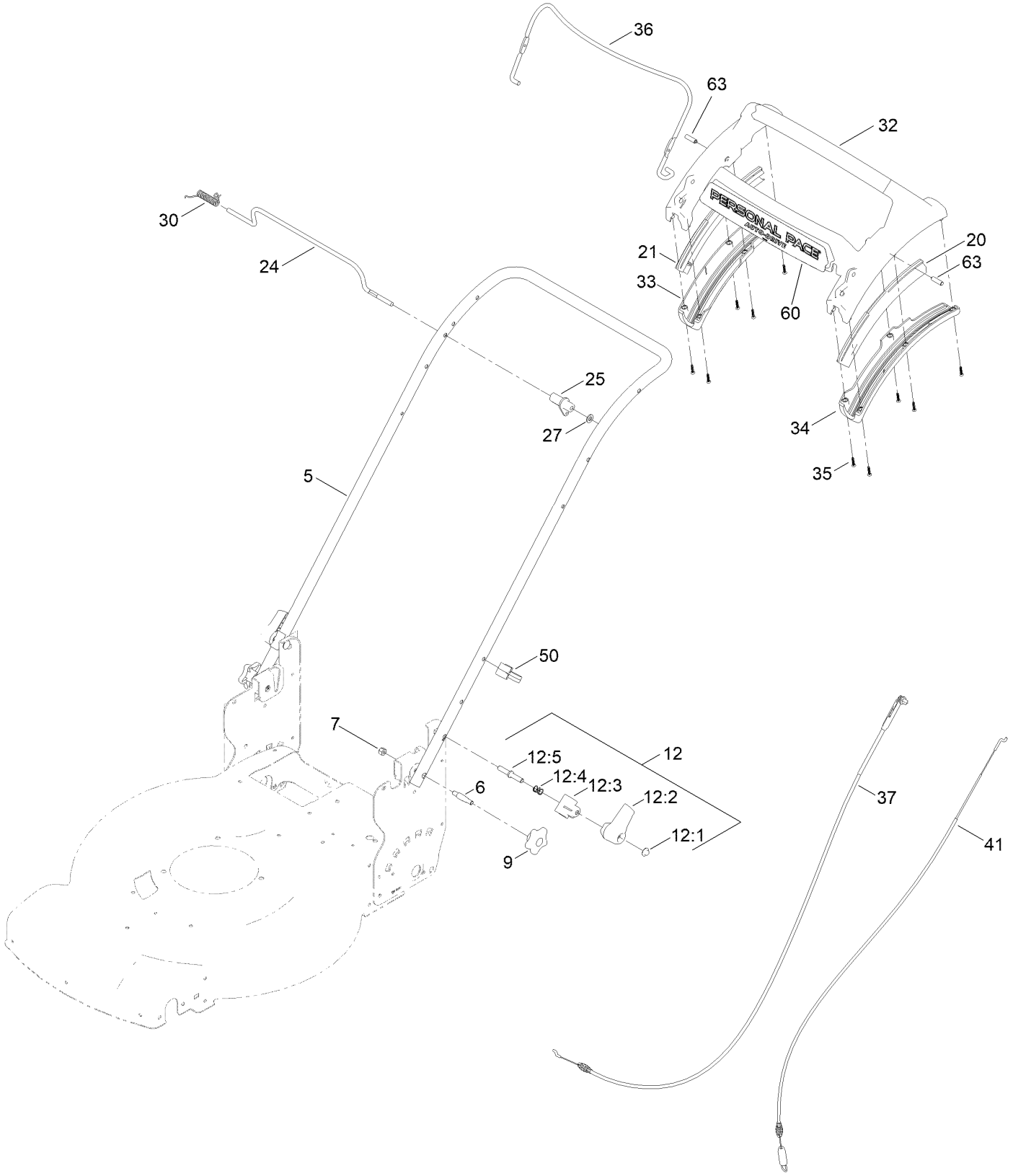

Handle Assembly (continued)

Ref.	Part Number	Qty.	Description
5	139-5458-05	1	Handle-Curved
6	139-6588	2	Bolt-Shoulder, Handle
7	3296-29	2	Nut-Lock, NI
9	117-5976	2	Knob-Handle
12	138-3249	2	Quick Release ASM
12:1	140-4157	1	Nut-Push
12:2	138-3248	1	Lever-Release
12:3	138-3253	1	Anchor-Spring
12:4	115-2858	1	Spring-Compression
12:5	140-4158	1	Rod-Release
20	140-2367	1	Guide-Curved, LH (Rwd)
21	140-2366	1	Guide-Curved, RH (Rwd)
24	139-5464	1	Rod-Control, Traction
25	139-6554	1	Lever-Traction, Rwd

Ref.	Part Number	Qty.	Description
27	3256-23	1	Washer-Plain
30	140-4194	1	Spring-Torsion
32	139-6569	1	Handle-Personal Pace, Curved
33	139-6567	1	Bottom-Handle, RH
34	139-6568	1	Bottom-Handle, LH
35	94-4496	10	Screw-PPH
36	140-4023-03	1	Bail-Brake
37	139-6594	1	Cable-Brake, Pp B&s
41	139-6595	1	Cable-Traction, Rwd (Pp)
50	114-7988	1	Guide-Cable
60	144-3181	1	Decal-60V, Personal Pace
63	139-6577	2	Pin-Handle, Pp

Electric Starter Assembly

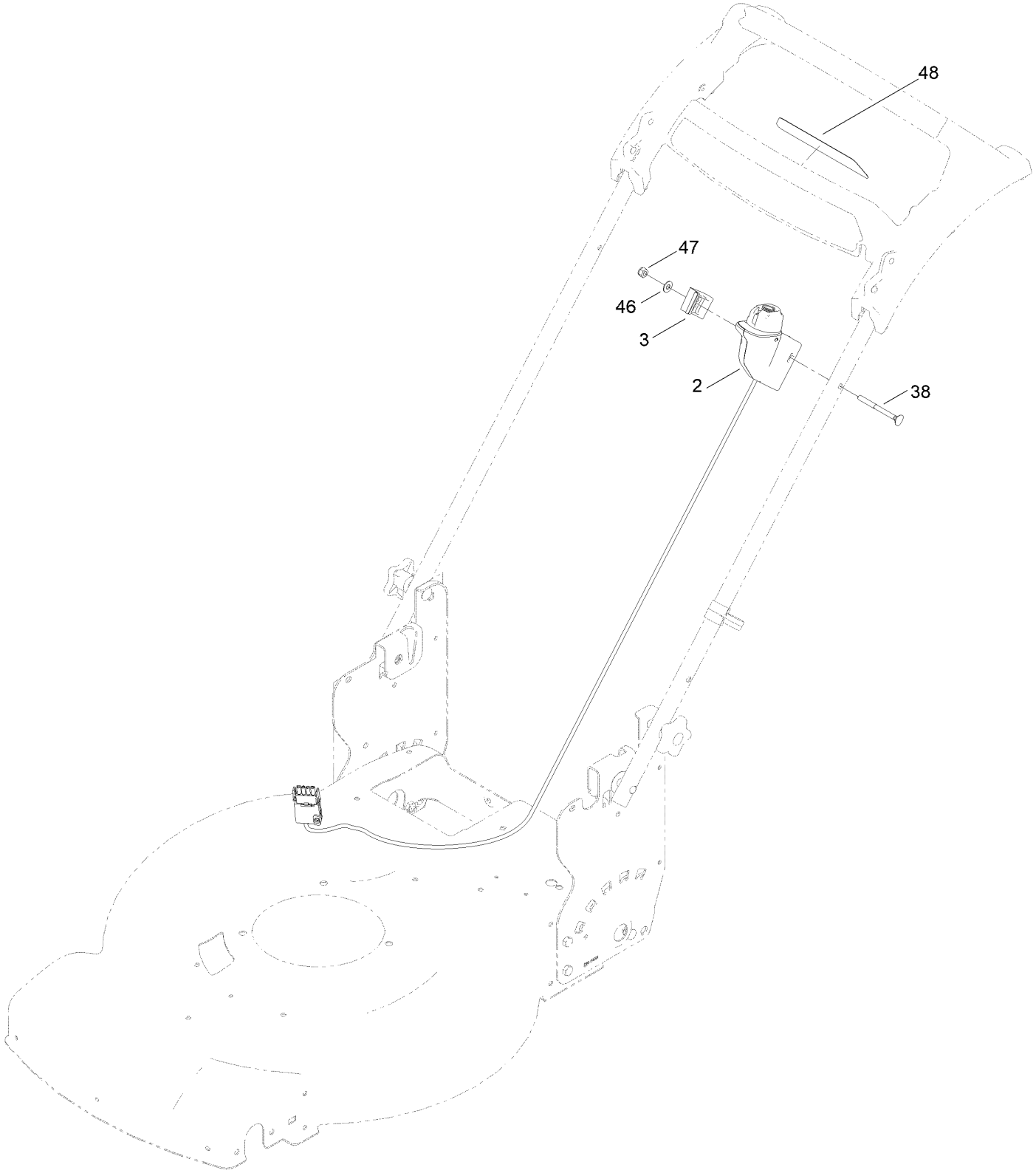

Electric Starter Assembly (continued)

Ref.	Part Number	Qty.	Description
2	140-4145	1	Switch-Starter ASM
3	140-4128	1	Clamp-Cable
38	92-2267	1	Screw-Handle

Ref.	Part Number	Qty.	Description
46	3256-1	1	Washer-Flat
47	3296-73	1	Nut-Lock, NI
48	140-1324	1	Decal-Controls (60V, Start)

Attachments and Accessories

For 21466T Flex-Force Power System 60V MAX 22in Recycler Lawn Mower

Product Name	Model/Part
Lawnmower Cover	490-7462
Smart Stow Walk Power Mower Cover	490-2012
Lawn Striping Kit with 22in Roller	20601
Bag-Walk Behind (Toro)	490-7318
60V LI-ION Battery 6.0 AH	88660
60V LI-ION, Battery 4.0 AH	88640
60V LI-ION Battery 7.5 AH	88675
60V Battery Charger 2 AMP	88602
60V Cordless Trimmer (Bare Tool)	51830T
60V Cordless Blower (Bare Tool)	51820T
Power Clear 21in 60V Cordless (Bare Tool)	39901T
60v 24in Max Hedge Trimmer (Bare Tool)	51840T
16in 60V Max Chainsaw (Bare Tool)	51850T

Notes:

Notes:

Notes:

TORO®

Count on it.