Illustrated Parts Manual

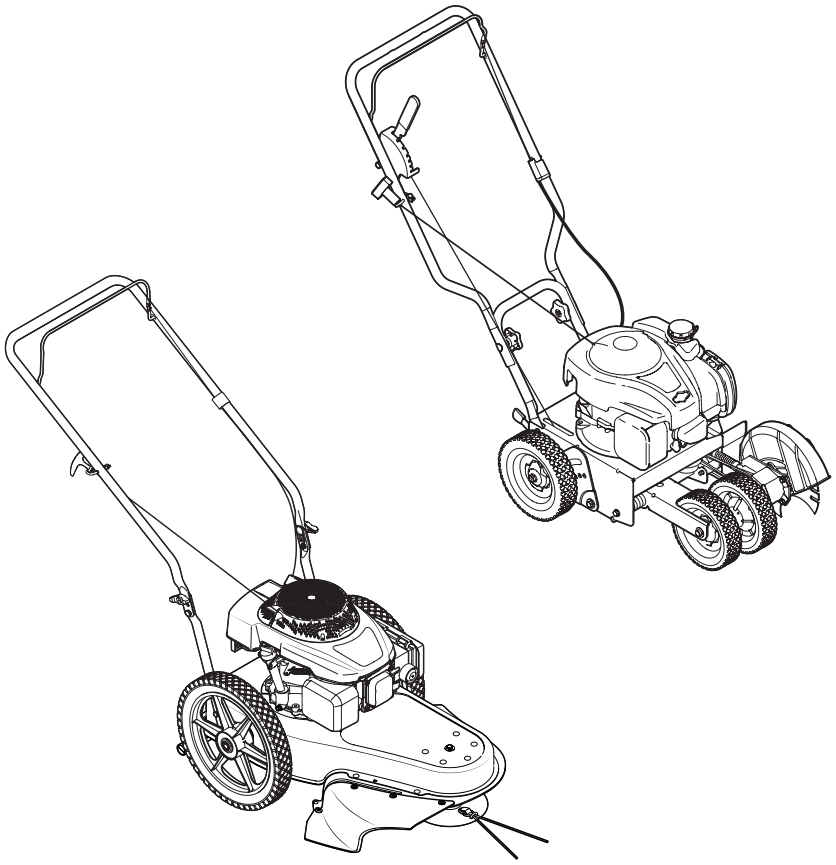

Spring / Summer Chore Performers

MTD LLC, P.O. BOX 361131 CLEVELAND, OHIO 44136-0019

Printed In USA

Form No. 769-10194
(September 11, 2014)

To The Owner

Thank You

Thank you for purchasing an MTD Chore Performer. It was carefully engineered to provide excellent performance when properly operated and maintained.

All information in this manual is relative to the most recent product information available at the time of printing. Please be aware that this Illustrated Part's Manual may cover a range of product specifications for various models.

Components listed and/or illustrated in this manual may not be applicable to all models. We reserve the right to change product specifications, designs and equipment without notice and without incurring obligation.

Throughout this manual, all references to *right* (RH) and *left* (LH) are observed from the operating position.

Table of Contents

Model Series 260 4
Model Series 550 6
Engine Model 5X65RU..... 8
Engine Model 1X65RU.....18
Engine Model 1T65RUA..... 28

Record Product Information

To ease in ordering replacement parts, please locate the model plate on the equipment and record the information in the provided area to the right. You can locate the model plate by looking beneath the seat.

Model Number

Serial Number

Painted Parts

When ordering painted service parts, a four digit color suffix must be added to the part number (e.g. 783-XXXXX-0637). Please refer to the table below for current color codes:

0637	Black
0709	Dark Green (Bolens, Yard-Man)
0662	Oyster Gray (MTD Gold)
0638	Red (Yard Machines, Huskee, Troy-Bilt, MTD)
0691	Black Jack (MTD Gold, MasterCut)

0674	Yellow (Yard-Man)
0650	Metallic Red (White Outdoor)
0629	Silver Flake (MTD Platinum)
04038	Day Orange (Daedong)
04033	Flint Mica (Troy-Bilt XP)

Page Left Blank Intentionally

Model Series 260

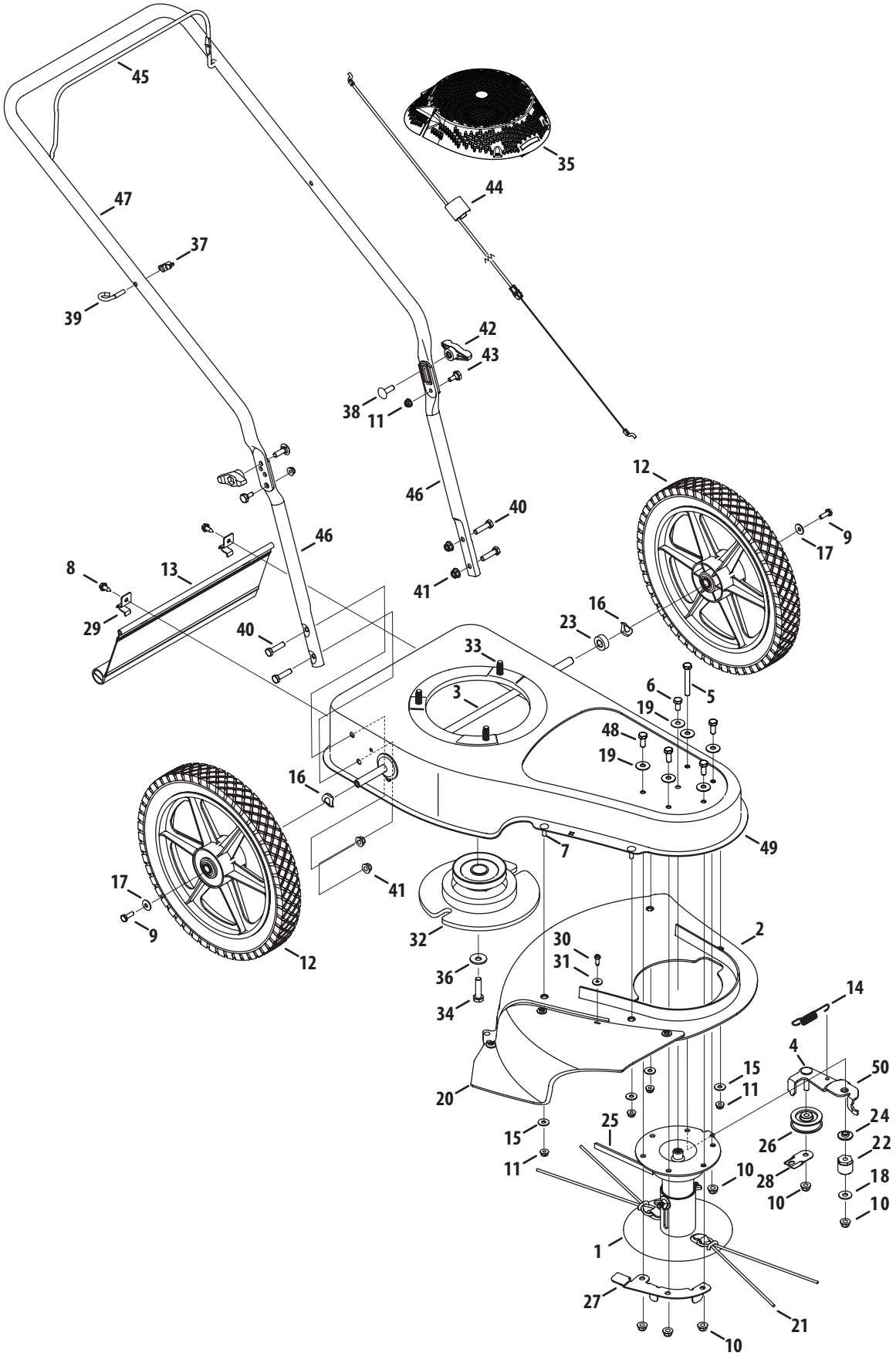

Ref.	Part Number	Description
1	618-07086	Spindle Assembly
2	631-0096	Deflector Assembly, Trimmer
		(incl. Deflector Flap and Hardware)
3	681-0159	Axle Assembly, Trimmer
4	710-0805A	Hex Cap Screw, 5/16-18 x 1.50
5	710-0395	Hex Cap Screw, 5/16-18 x 2.25
6	710-0237	Hex Screw, 5/16-24, .625, Gr5, Std
7	710-0703	Screw, Carriage, 1/4-20, .75, Gr5
8	710-1652	Screw, Self-tapping, 1/4-20 x .625
9	710-3015	Hex Screw, 1/4-20, .75, Gr5, Std
10	712-04063	Nut, Flange Lock, 5/16-18, GrF
11	712-04064	Nut, Flange Lock, 1/4-20, GrF
12	734-04030	Wheel, 14 x 1.75, Gray
13	731-2329	Trailshield, 5.85 x 14.50
14	732-1022	Spring, Extension, .50 OD x 3.375
15	736-0173	Washer, Flat, .280 x .740 x .063
16	736-0182	Washer, Spring, .500 x 1.00 x .022
17	736-0270	Washer, Belle, .265 x .750 x .060
18	736-0371	Washer, Flat, .343 x .880 x .062
19	936-0425	Washer, Belle, .325 x .930 x .045
20	731-2315	Flap, Deflector, String Trimmer
21	490-040-M035	Line, Trimmer, .155, 10-pack
22	948-0278	P/M Spacer
23	750-1240	Spacer, .51 ID x 1.00 OD x .38
24	750-1275	Spacer, Idler, Trimmer
25	954-05077	V-Belt

Ref.	Part Number	Description
26	756-05108	Pulley, Idler, Trimmer
27	781-1020	Keeper Bracket, Front
28	781-1028	Keeper Bracket, Idler
29	782-9065	Hinge Clip, Trailshield
30	710-1823	Screw, HL, #12-16, .625, Panphi
31	936-0400	Washer, Flat, .194 x .62 x .063
32	656-05003	Pulley/Flywheel
33	710-0654A	Sems Screw, 3/8-16, 1.0,
34	710-06074	Hex Screw, 3/8-24, 1.25, Gr8
35	731-09688	Cover, Shroud
36	936-0452	Washer, Belle, .396 x 1.14 x .095
37	720-0279	Knob, Handle
38	710-04998	Screw, Carriage, 5/16-18, 1.00, Gr5
39	710-1205	Eye Bolt, 1/4-20
40	710-3005	Hex Screw, 3/8-16, 1.25, Gr5, Std
41	712-04065	Nut,, Flange Lock, 3/8-16, GRF
42	720-04122	Knob, Wing, 5/16-18, Black
43	738-04419A	Shoulder Screw, .375 x .148 x1/4-20
44	946-05141	Control Cable, 48”
45	747-06246	Bail, Black
46	749-05102	Handle, Lower
47	749-05103	Handle, Upper
48	710-3008	Hex Cap Screw, 5/16-18 x .75
49	781-05007A	Trimmer Base
50	981-1008A	Idler Trimmer Bracket
—	723-0400	Safety Glasses

Model Series 550

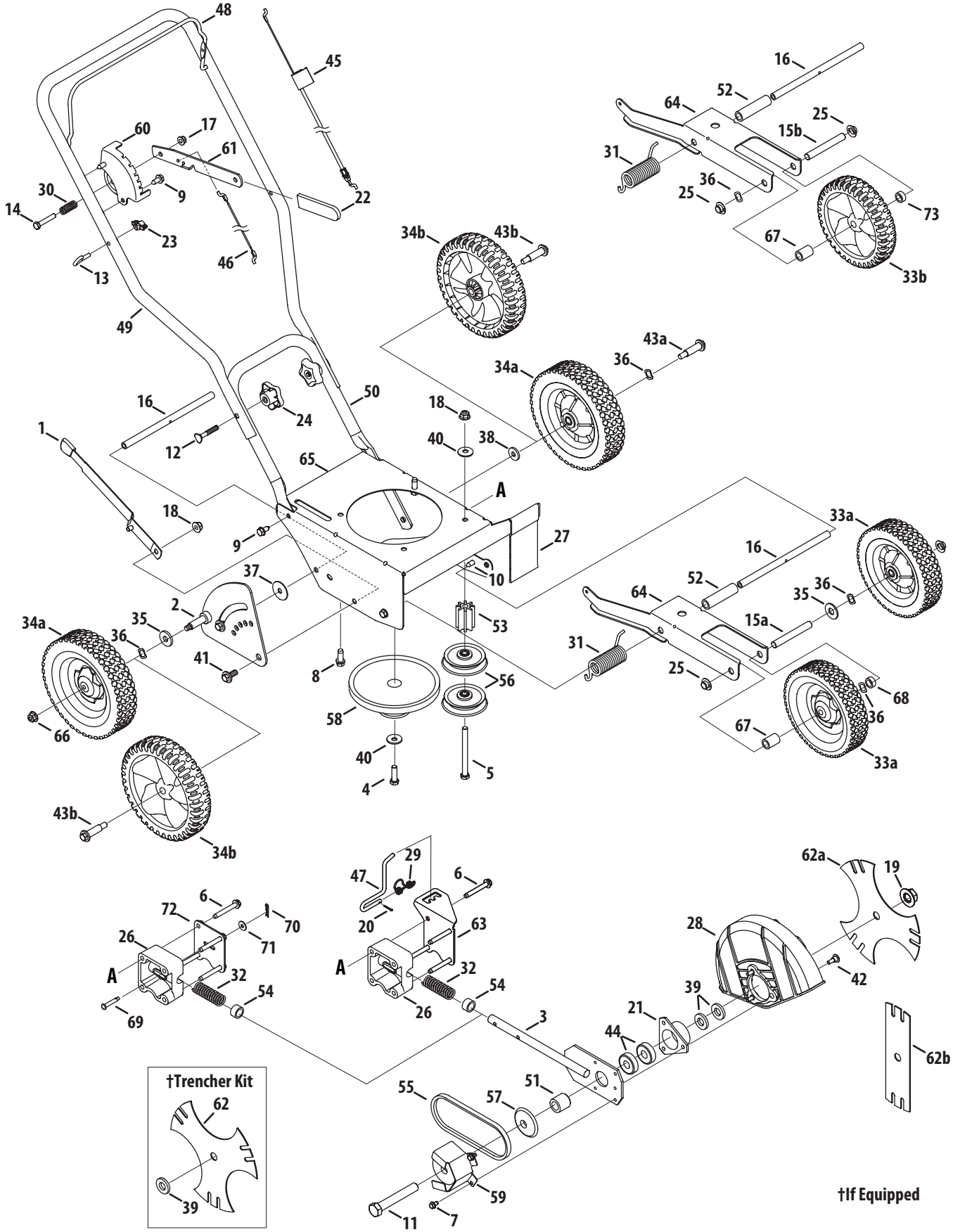

Ref.	Part No.	Description
1	687-02022	Curb Height Adjustment Lever
2	687-02585	Curb Height Adjuster Plate
3	687-02126	Blade Plate Assembly
4	710-0191	Screw ⅜-24
5	710-0411	Screw ⅜-16
6	710-04389	Hex Screw, 5⁄16-18
7	710-0599	Self-tapping Screw, ¼-20
8	710-0654A	Screw, ⅜-16
9	710-0726	Hex Screw, 5⁄16-12
10	710-0870	Hex Screw 5⁄16-18
11	710-1143A	Hex Screw, ⅝-18
12	710-1174	Carriage Bolt, 5⁄16-18
13	710-1205	Rope Guide (Eye Bolt)
14	710-3180	Hex Screw, 5⁄16-18
15a	711-05696	Axle Shaft .50x6.65
15b	711-04362	Axle Shaft .50 x 3.8
16	711-04440	Frame Spacer .50x9.25
17	712-04063	Lock Flange Nut, 5⁄16-18
18	712-04065	Flange Nut ⅜-16
19	712-0417A	Flange Nut, ⅝-18
20	714-3010	Clevis Pin 3⁄32 x .625
21	718-04012	Bearing Cup
22	720-0142	Grip
23	720-0279	Wing Nut
24	720-04072A	Star Knob
25	726-0299	Push Cap ½" rod
26	931-04207	Bearing Block
27	731-05063	Debris Guard
28	731-05064	Blade Guard
29	732-0188A	Double Torsion Spring
30	932-0369	Compression Spring
31	732-04045	Torsion Spring
32	932-04169	Compression Spring
33a	734-1264	Wheel 7 x 1.75 T-Tread
33b	734-04562	Wheel 7 x 1.8, Pin Bar, Grey
34a	734-1268	Wheel 8 x 1.75 T-Tread
34b	734-04563	Wheel 8 x 1.8, Pin Bar, Grey
35	736-04019	Flat Washer, .531 x 1.25 x .181
36	936-0232	Wave Washer .531 x .781 x .013

Ref.	Part No.	Description
37	736-0234	Flat Washer, .385 x 1.5 x .075
38	736-0258	Flat Washer .385 x 1.0 x .135 †
39	936-04088	Flat Washer .635x1.24x.181
40	936-0452	Bell Washer,.396 x 1.140
41	738-04149	Shoulder Screw, ⅜-16
42	738-0706C	Shoulder Screw
43a	738-0929	Shoulder Screw, ⅜-16
43b	938-0533	Shoulder Screw, .498 x 1.635
44	941-0524A	Bearing, .625 ID x 1.57 OD
45	746-04035	Control Cable (Briggs & Stratton)
46	946-04036	Wheel Adjustment Cable
47	747-04110A	Blade Adjustment Rod
48	747-0976A	Bail Handle
49	749-04183A	Upper Handle
50	749-04234	Lower Handle
51	950-04105	Spacer, .63 x 1.12 x 1.06
52	750-04129	Spacer
53	950-04142	Pulley Mount Spacer
54	750-0547	Spacer, .64 x.88 x .50
55	954-04032B	Belt
56	756-04148	Flat Idler Pulley, 2.5 OD
57	956-0449	Sheave
58	756-1150A	Combination Flywheel Pulley
59	781-0427	Belt Guard
60	781-0741A	Depth Index Bracket
61	781-0742	Depth Index Lever
62a	781-0748	Tri-Star Blade
62b	781-0080	Standard Blade
63	787-01081A	Bracket Plate
64	787-01240	Dual Wheel Bracket
65	787-01304	Frame
66	712-04217	Flange Lock Nut, 3/8-16
67	750-05548	Spacer., .525 x .775 x .93
68	750-0664	Spacer., .505ID x .88OD x .440
69	711-1017	Clevis Pin, .250 x 1.53
70	914-0104	Cotter Pin, .072 x 1.12
71	736-0342	Flat Washer, .283 x .75 x .030
72	787-01075A	Cover Plate
73	750-04428	Spacer, .525 x .775 x .3125

NOTE**:** Edger features vary by model. NOT all parts listed and pictured above are standard equipment.

Engine Model 5X65RU Air Cleaner

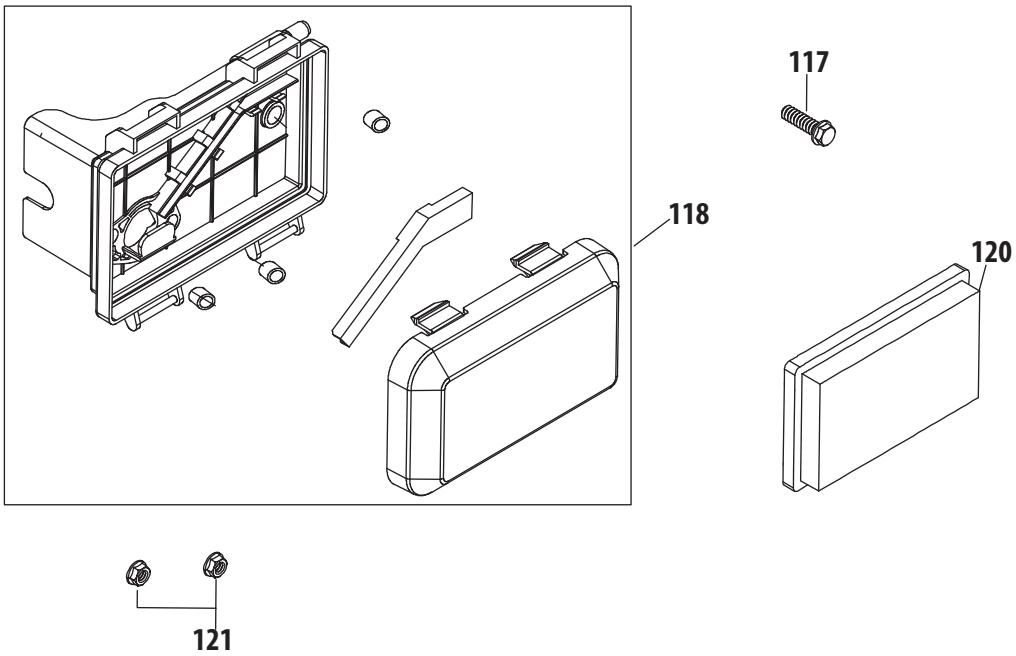

Ref.	Part Number	Description
117	710-04969	Bolt M6X30 Af Base/Coil/E-Starter
118	951-14439	Air Cleaner Housing Assembly
120	951-10298	Air Cleaner Kit
121	712-05015	Nut M6X10Mm Starter/Carb/Muff

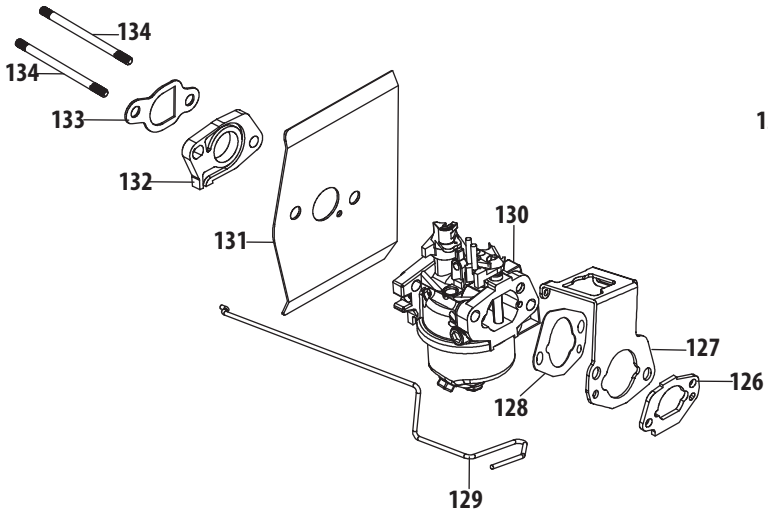

179 - Carburetor Kit

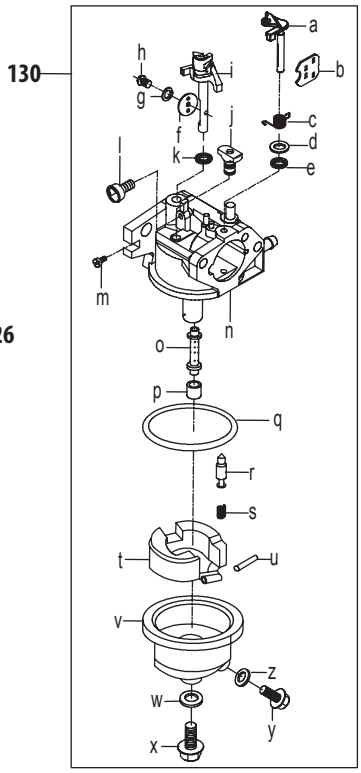

Ref.	Part Number	Description
126	951-14419	Air Filter Base Gasket
127	951-14420	Choke Temp Control Bracket
128	951-14422	Choke Temp Control Bracket Gasket
129	951-14421	Choke Temp Control Linkage
130	951-14423	Carburetor Assembly
131	951-14424	Carburetor Gasket
132	951-11738	Carburetor Insulator
133	951-11528	Carburetor Insulator Gasket
134	951-14425	Carb Stud M6×87
179	951-14446	Carburetor Kit
		(Incl.e,j,k,l,o,p,q,r,s,t,u,w,z)
a	n/a	Choke Shaft
b	n/a	Choke Plate
c	n/a	Choke Return Spring
d	n/a	Choke Shaft Washer
e	n/a	Choke Shaft Fiber O-Ring
f	n/a	Throttle Plate
g	n/a	Throttle Plate Lock Washer
h	n/a	Screw M3X6 Throttle Plate

Ref.	Part Number	Description
i	n/a	Throttle Shaft
j	n/a	Idle Jet Assembly
k	n/a	Throttle Shaft Fiber O-Ring
l	n/a	Idle Speed Adjusting Screw
m	n/a	Idle Mixture Screw
n	n/a	Carburetor Body
o	n/a	Emulsion Tube
p	n/a	Main Jet
q	n/a	Fuel Bowl O-Ring
r	n/a	Needle Valve
s	n/a	Needle Valve Spring
t	n/a	Float
u	n/a	Float Pin
v	n/a	Fuel Bowl
w	n/a	Fuel Bowl Gasket
x	n/a	Fuel Bowl Mounting Bolt
y	n/a	Fuel Drain Plug
aa	n/a	Fuel Drain Plug Gasket

5X65RU Crankcase

176 - Gasket Kit - Complete

177 - Gasket Kit -External

178 - Complete Engine

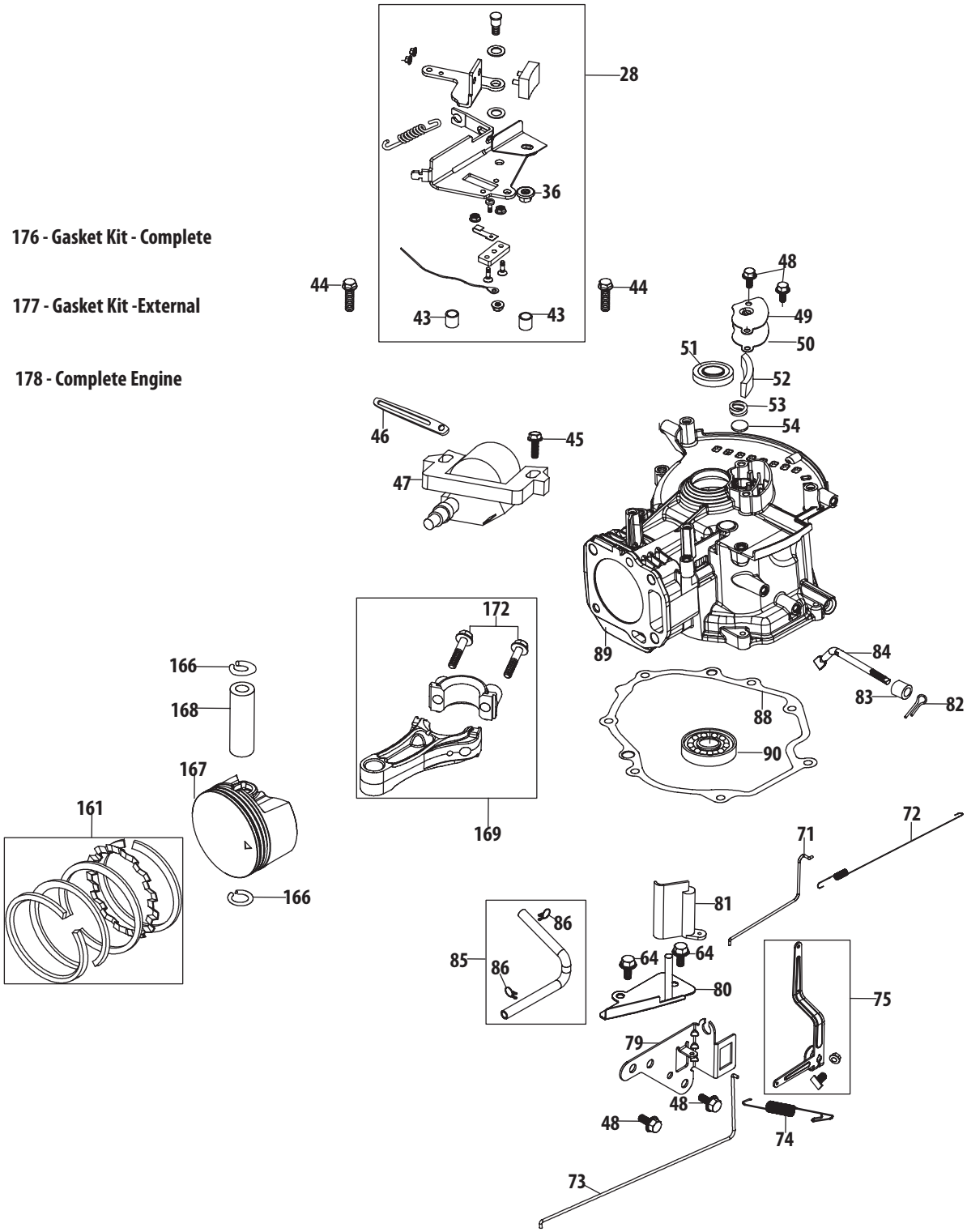

Ref.	Part Number	Description
28	951-14402	Brake Assembly
36	712-04219	Brake Arm Nut
38	712-04209	Ground Switch Nuts M4
43	750-05384	Brake Spacer
44	710-04980	Bolt M6X35 Af Base/Brake/Dipstick
45	710-04918	Bolt M6×20 Ignition Coil
46	951-11622	Flexible Clamp, Ignition Coil
47	951-14403	Ignition Coil Assembly
48	710-04916	Bolt M6X14 Multi-Purpose
49	951-14404	Breather Cover Plate
50	951-14405	Breather Gasket
51	951-11596	Upper Crankshaft Seal
52	951-11730	Breather Screen
53	732-04718	Breather Valve Spring
54	951-11614	Breather Valve
64	710-04915	Bolt M6X12 Multi-Purpose
71	951-14408	Choke Linkage
72	951-14409	Throttle Linkage Spring
73	951-14410	Throttle Linkage
74	951-14411	Governor Spring
75	951-14412	Governor Arm Assembly
79	951-14413	Component Bracket
80	951-14414	Air Vane Bracket
81	951-11529	Air Vane

Ref.	Part Number	Description
82	714-04074	Governor Arm Shaft Cotter Pin
83	951-11574	Governor Seal
84	951-14416	Governor Arm Shaft
85	951-11520	Breather Hose Assembly
86	726-04101	Breather Hose Clamp
88	951-14415	Crankcase Cover Gasket
89	951-14447	Short Block
		(Incl.48-54,82-84,88-92,95,97-100,
		110-116,126,132,133,149,152,156,
		157,159-161,166-169,172)
90	951-11369	Main Bearing
161	951-14433	Piston Ring Set
166	951-11603	Piston Pin Snap Ring
167	951-14434	Piston
168	951-14435	Piston Pin
169	951-14436	Connecting Rod Assembly
172	710-05115	Connecting Rod Bolt
176	951-14443	Gasket Kit - Complete
		(Incl.50,51,83,88,95,113,116,126,
		128,131-133,149,152,156)
177	951-14444	Gasket Kit -External
		(Incl.50,95,113,126,128,
		131-133,149,152)
178	952Z5X65RU	Complete Engine

5X65RU Crankshaft & Crankcase Cover

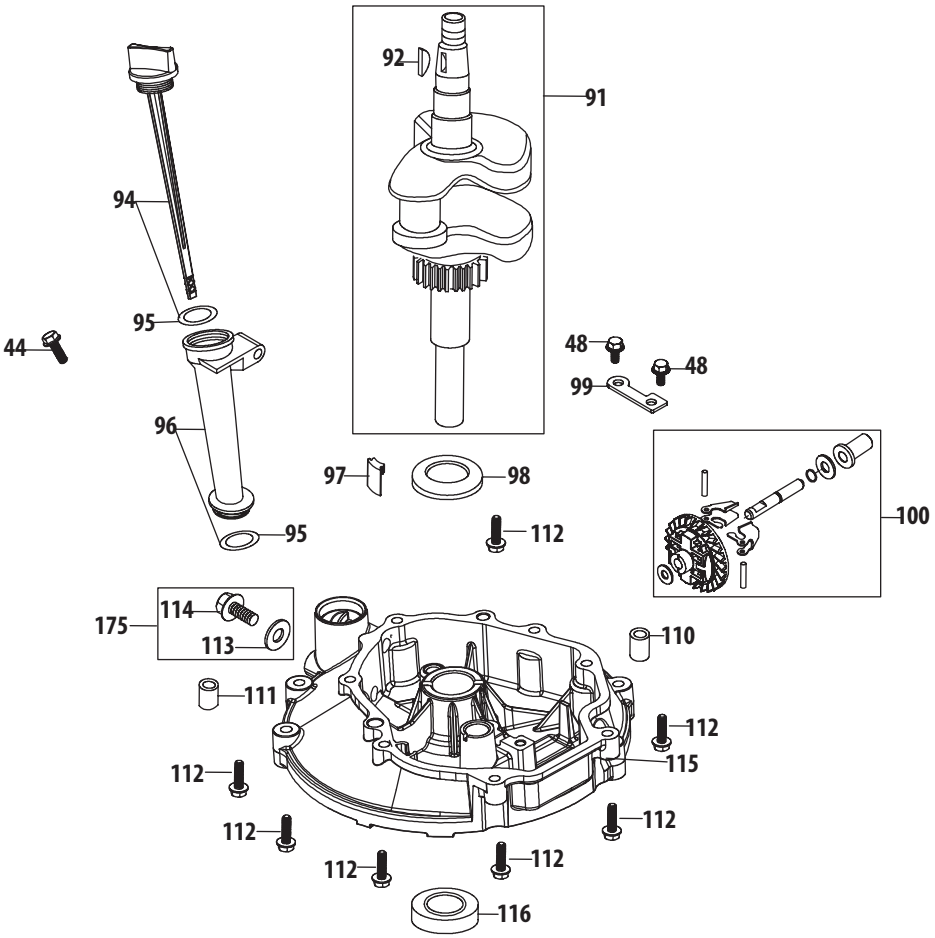

Ref.	Part Number	Description
44	710-04980	Bolt M6X35 Af Base/Brake/Dipstick
48	710-04916	Bolt M6X14 Multi-Purpose
91	951-14417	Crankshaft Assembly
92	951-10307	Flywheel Key
94	951-14440	Oil Dipstick Assembly
95	951-11546	Dipstick / Oil Fill Tube O-Ring
96	951-14441	Oil Fill Tube Assembly
97	951-11733	Oil Return Seal
98	736-04491	Crankshaft Thrust Washer
99	951-11609	Governor Gear Mounting Plate

Ref.	Part Number	Description
100	951-11549	Governor Gear/Shaft Assembly
110	715-04092	Crankcase Cover Dowel Pin 7×14
111	715-04089	Crankcase Cover Dowel Pin 9×14
112	710-04931	Bolt M6X28 X65/P65 Crankcase
113	736-04440	Oil Drain Plug Washer
114	710-04906	Oil Drain Plug
115	951-14418	Crankcase Cover
116	951-11545	Lower Crankshaft Seal
175	951-10370	Oil Drain Plug & Washer Assembly

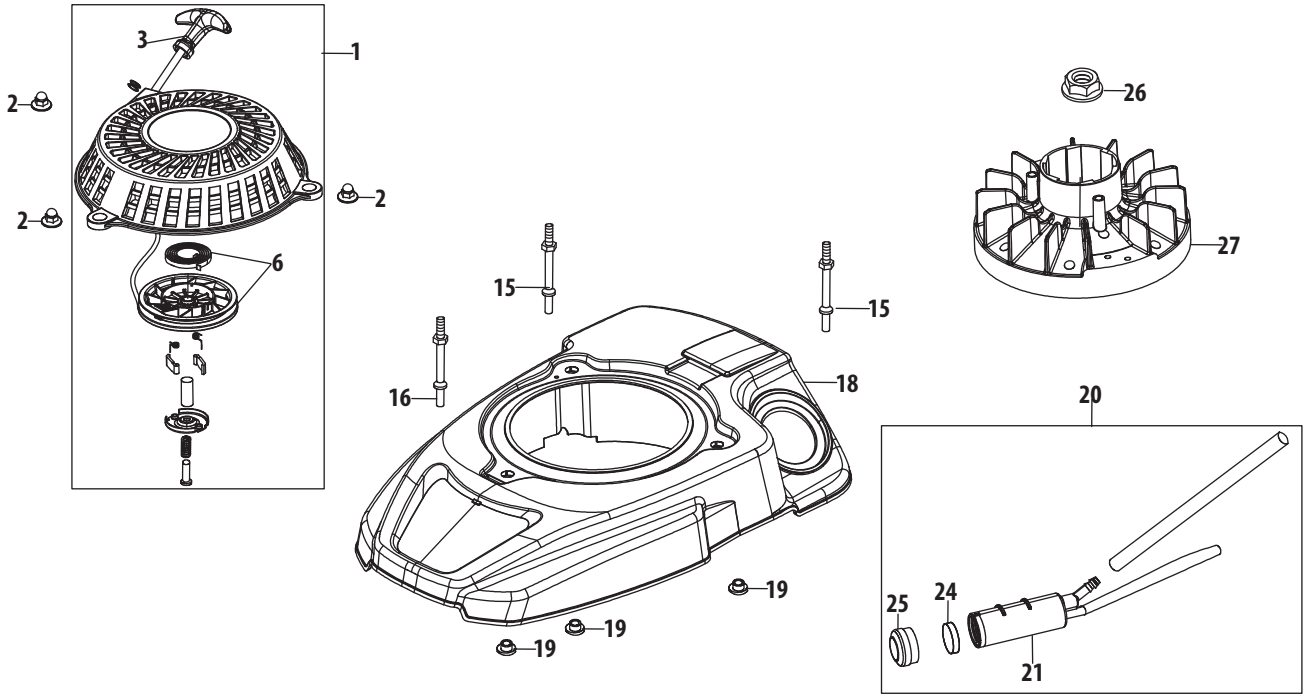

Ref.	Part Number	Description
1	951-14396	Starter Recoil Assembly
2	712-04290	Starter Acorn Nut
3	731-07925	Starter Handle
6	951-11721	Recoil Pulley & Spring Assembly
15	951-14397	Starter/Shroud Rear Stud M6×78.5
16	951-14398	Starter/Shroud Front Stud M6×74
18	951-14399	Engine Shroud Assembly

Ref.	Part Number	Description
19	750-05320	Engine Shroud Spacer
20	951-14442	Carbon Canister Assembly
21	951-14126	Carbon Canister
24	951-14400	Carbon Canister Filter
25	951-14127	Carbon Canister Filter Cap
26	712-04287	Flywheel Nut M14
27	951-14401	Flywheel

5X65RU Cylinder Head

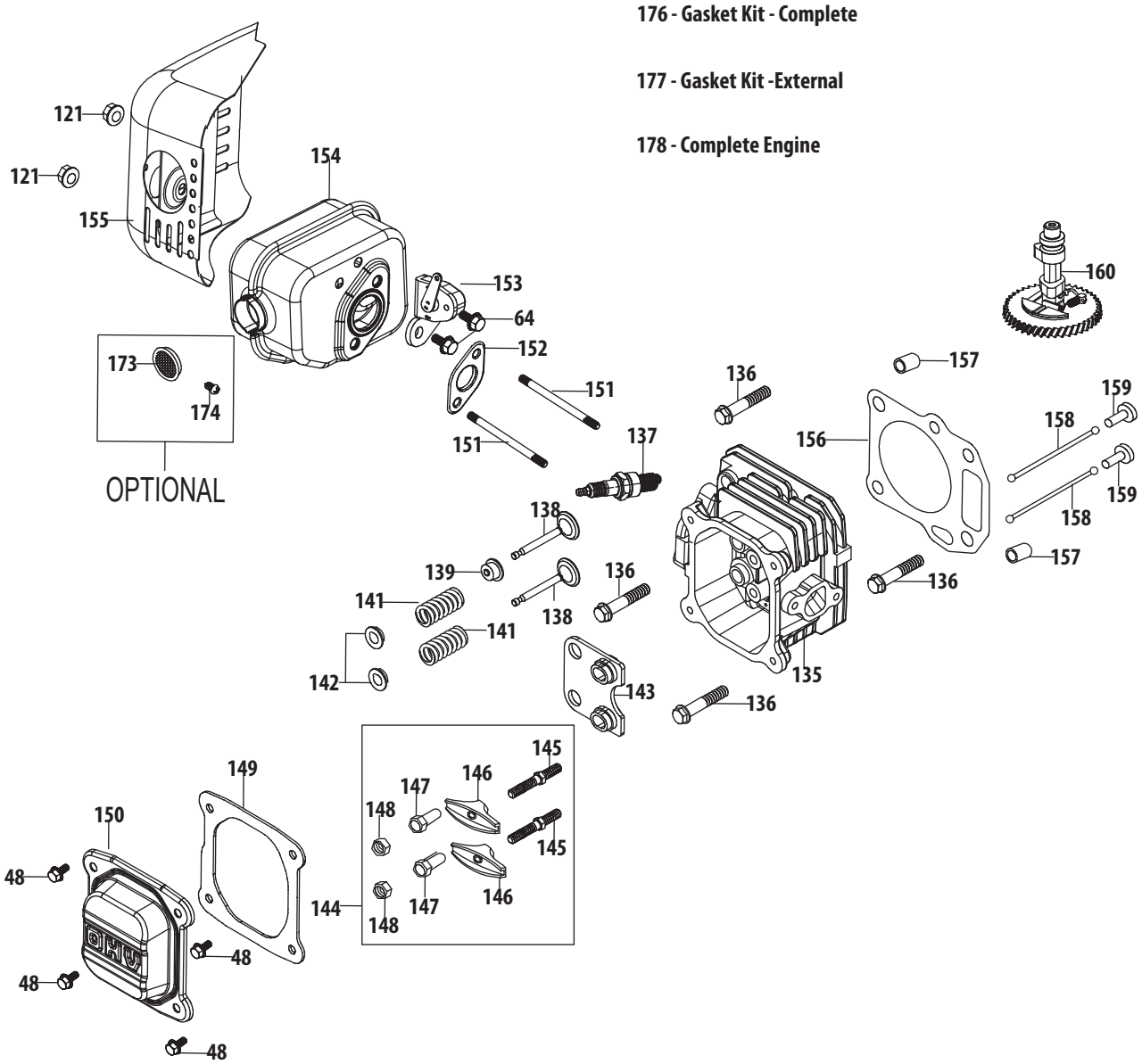

Ref.	Part Number	Description
48	710-04916	Bolt M6X14 Multi-Purpose
135	951-14448	Cylinder Head Asm
		(Incl.132,133,135,138-143,
		145-149,152,156)
	951-14445	Cylinder Head Service Kit
		(Incl.136,139,149,156)
136	710-04982	Bolt M8X54 Cylinder Head
137	951-14437	Spark Plug, F5Rtc
138	951-10313	Valve Kit
139	951-11818	Intake Valve Seal
140	951-10313	Valve Kit
141	951-12004	Valve Spring
142	951-11977	Valve Spring Retainer
143	951-11687	Push Rod Guide
144	951-11606	Rocker Arm Assembly
145	710-04902	Rocker Arm Stud
146	951-12001	Rocker Arm
147	751-11123	Fulcrum Nut
148	751-11124	Jam Nut
149	951-11551	Valve Cover Gasket
150	951-14426	Valve Cover

Ref.	Part Number	Description
151	710-05094	Muffler Stud M6X95
151	951-10342	Muffler Stud Assembly
152	951-14427	Muffler Gasket
153	951-14428	Choke Temp Control Thermostat
154	951-14429	Muffler Assembly
155	951-14430	Muffler Shield
156	951-14431	Cylinder Head Gasket
157	715-04108	Cylinder Head Dowel Pin 10×16
158	951-10314	Push Rod Kit
159	951-14432	Tappet
160	951-11741	Camshaft Assembly
173	951-10351	Spark Arrestor
174	710-04983	Spark Arrestor Screw
176	951-14443	Gasket Kit - Complete
		(Incl.50,51,83,88,95,113,116,126,
		128,131-133,149,152,156)
177	951-14444	Gasket Kit -External
		(Incl.50,95,113,126,128,
		131-133,149,152)
178	952Z5X65RU	Complete Engine

5X65RU Fuel Tank

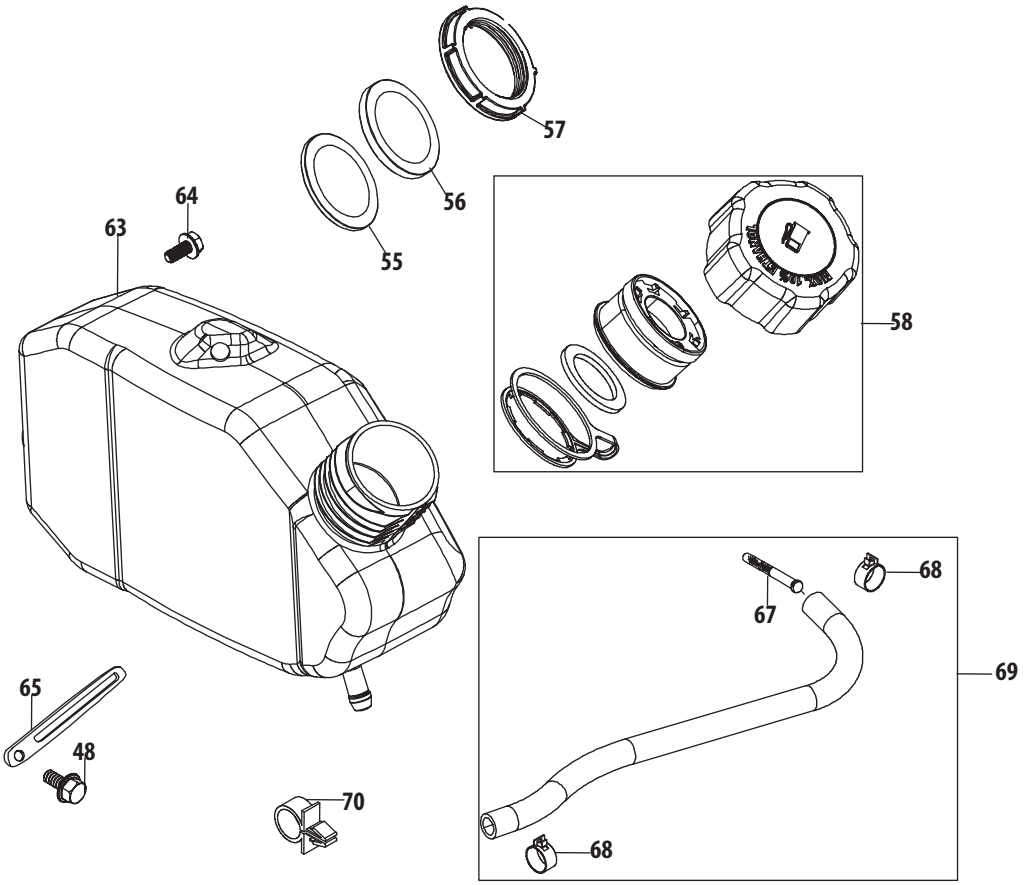

Ref.	Part Number	Description
48	710-04916	Bolt M6X14 Multi-Purpose
55	731-08133	Fuel Tank Lower Grommet
56	951-14406	Fuel Tank Upper Grommet
57	731-08104	Fuel Tank Nut
58	951-14407	Fuel Cap Assembly
63	931-04629	Fuel Tank
64	710-04915	Bolt M6X12 Multi-Purpose
65	951-11680	Flexible Clamp, Vent Hose
67	951-10358A	Fuel Filter
68	951-11700	Fuel Hose Clamp
69	951-14438	Fuel Line Kit
70	723-04071	Plastic Support Clamp

Engine Model 1X65RU Air Cleaner

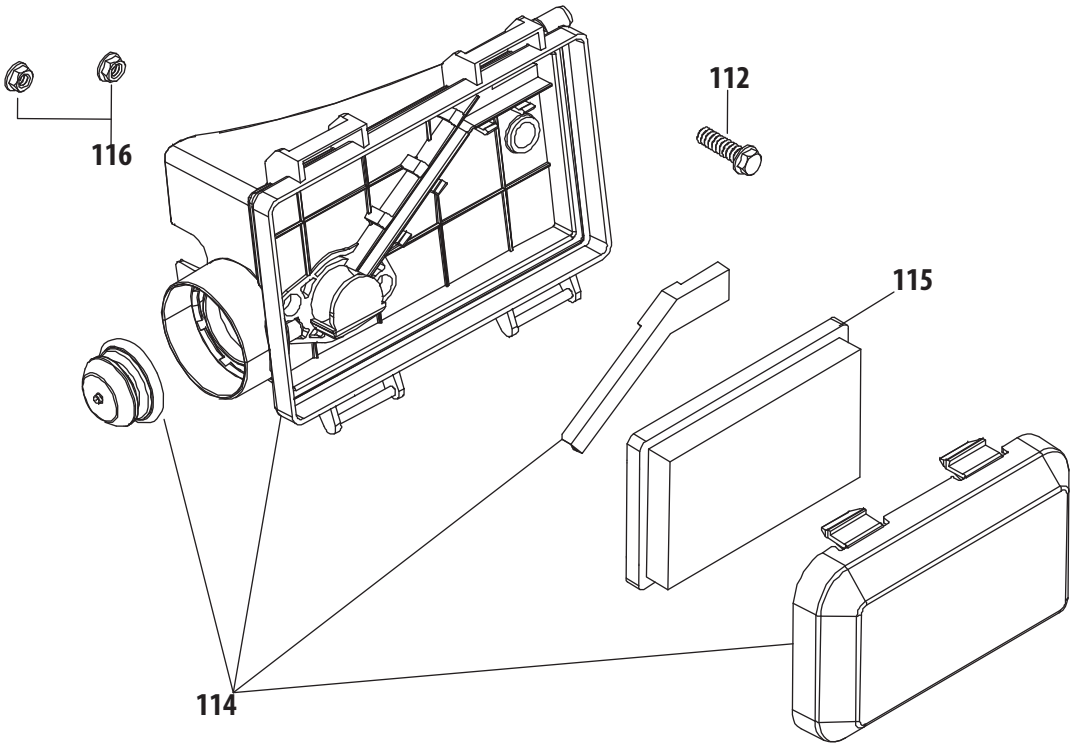

Ref.	Part Number	Description
112	710-04969	Bolt M6X30 Af Base/Coil/E-Starter
114	751-14439	Air Filter Cover
115	951-14632	Air Filter Element, Paper
116	712-05015	Nut M6X10Mm Starter/Carb/Muff

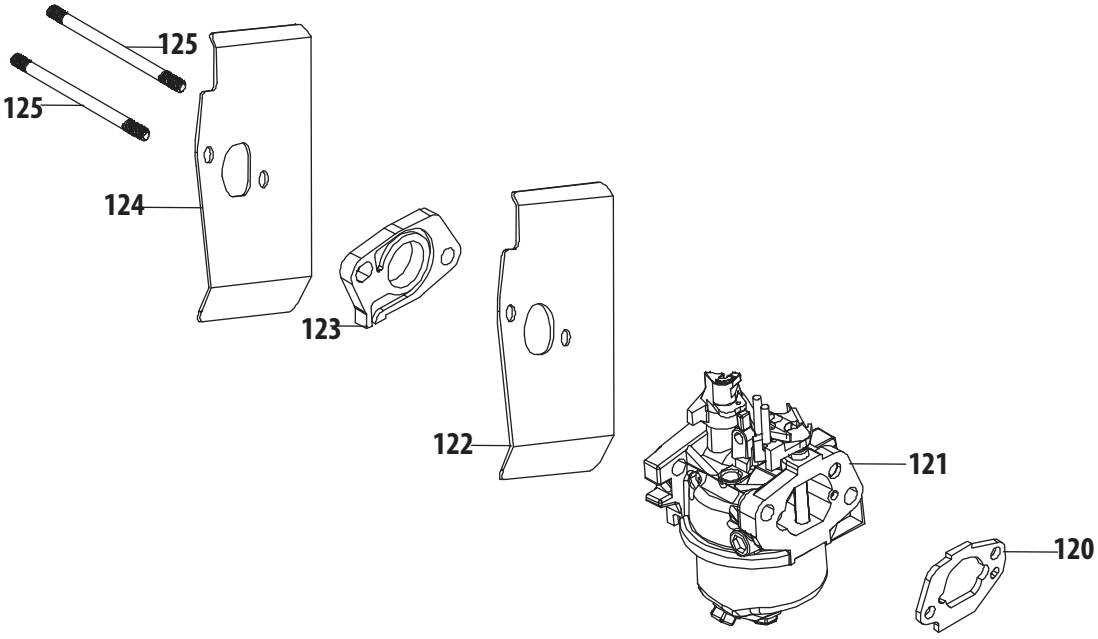

Ref.	Part Number	Description
120	951-14419	Air Filter Base Gasket
121	651-05232	Carburetor Assembly
121	751-14824	Carburetor Rebuild Kit
122	951-14424	Carburetor Gasket
123	951-11738	Carburetor Insulator
124	751-14827	Carburetor Gasket
125	751-14826	Carb Stud M6×87

1X65RU Crankcase

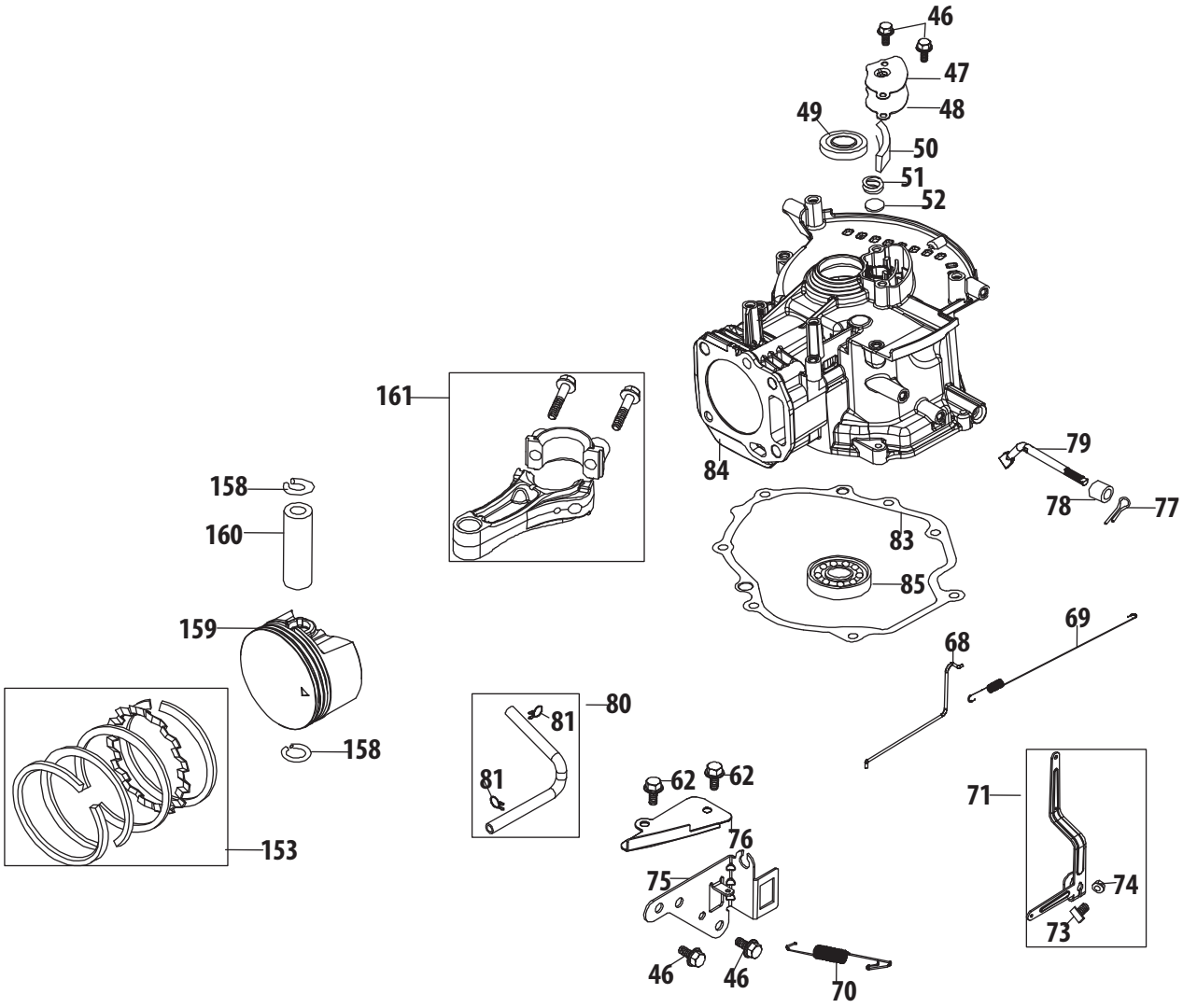

Ref.	Part Number	Description
46	710-04916	Bolt M6X14 Multi-Purpose
47	951-14404	Breather Cover Plate
48	951-14405	Breather Gasket
49	951-11596	Upper Crankshaft Seal
50	951-11730	Breather Screen
51	732-04718	Breather Valve Spring
52	951-11614	Breather Valve
62	710-04915	Bolt M6X12 Multi-Purpose
68	951-14410	Throttle Linkage
69	951-14409	Throttle Linkage Spring
70	951-14411	Governor Spring
71	951-14412	Governor Arm Assembly
73	710-04908	Governor Arm Bolt
74	712-05015	Governor Arm Nut M6
75	951-14413	Component Bracket

Ref.	Part Number	Description
76	951-14605	Air Vane Cover Plate
77	714-04078	Governor Arm Shaft Cotter Pin
78	951-11574	Governor Seal
79	951-14416	Governor Arm Shaft
80	951-11520	Breather Hose Assembly
81	726-04101	Breather Hose Clamp
83	951-14415	Crankcase Cover Gasket
84	751-14635	Crankcase
84	651-05150A	(Mtd Srvc Kit) Short Block
85	951-11369	Main Bearing
153	951-14433	Piston Ring Set
158	951-11603	Piston Pin Snap Ring
159	951-14434	Piston
160	951-14435	Piston Pin
161	951-14436	Connecting Rod Assembly

1X65RU Crankshaft & Cover

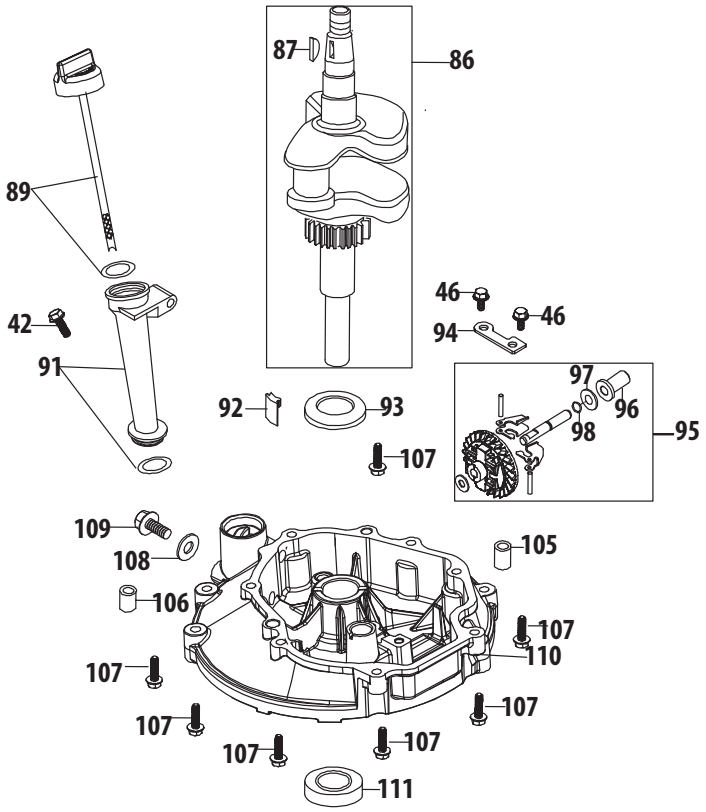

Ref.	Part Number	Description
42	710-04980	Bolt M6X35 Af Base/Brake/Dipstick
46	710-04916	Bolt M6X14 Multi-Purpose
86	951-14417	Crankshaft Assembly
87	951-10307	Flywheel Key
89	951-14440	Dipstick
91	751-14441	Oil Fill Tube
92	951-11733	Oil Return Seal
93	736-04491	Crankshaft Thrust Washer
94	951-11609	Governor Gear Mounting Plate
95	951-11549	Governor Gear/Shaft Assembly

Ref.	Part Number	Description
96	931-09595	Governor Slide Cap
97	936-05038	Governor Slide Cap Washer
98	916-05003	Governor Shaft Stop Ring
105	715-04092	Crankcase Cover Dowel Pin Φ7×14
106	715-04096	Crankcase Cover Dowel Pin Φ9×14
107	710-04943	Bolt M6X28 T/X/P Multi-Purpose
108	736-04440	Oil Drain Plug Washer
109	710-04906	Oil Drain Plug
110	951-14418	Crankcase Cover
111	951-11545	Lower Crankshaft Seal

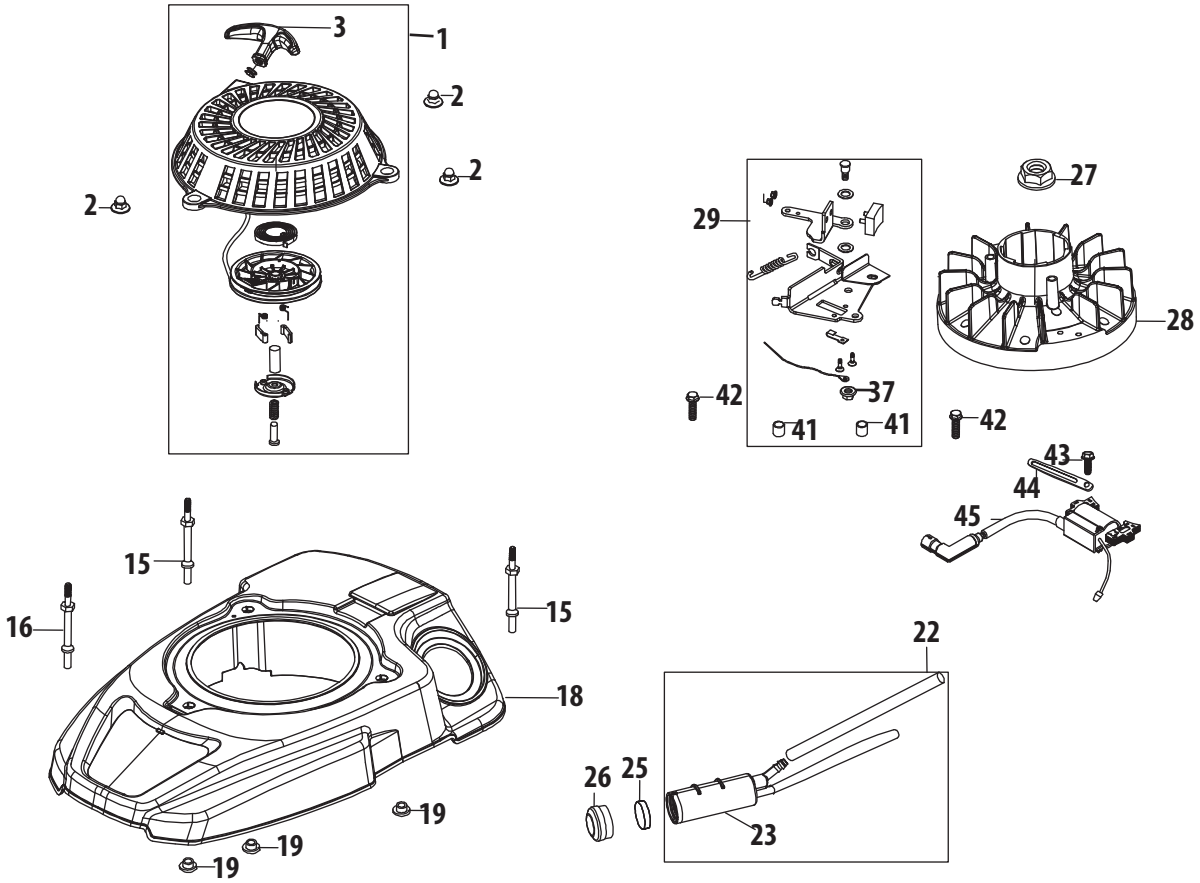

Ref.	Part Number	Description
1	951-14396	Starter Recoil Assembly
2	712-04276	Starter Acorn Nut
3	731-07925	Starter Handle
15	951-14397	Starter/Shroud Rear Stud M6×78.5
16	951-14398	Starter/Shroud Front Stud M6×74
18	951-14399	Engine Shroud
19	750-05320	Engine Shroud Spacer
22	751-14442	Carbon Canister Assembly
23	951-14126	Carbon Canister
25	951-14400	Carbon Canister Filter

Ref.	Part Number	Description
26	951-14127	Carbon Canister Filter Cap
27	712-04287	Flywheel Nut M14
28	951-14401	Flywheel
29	951-14402	Brake Assembly
37	712-04219	Brake Arm Nut
41	750-05384	Brake Spacer
42	710-04980	Bolt M6X35 Af Base/Brake/Dipstick
43	710-04918	Bolt M6×20 Ignition Coil
44	951-11622	Flexible Clamp, Ignition Coil
45	951-14403	Ignition Coil Assembly

1X65RU Cylinder Head

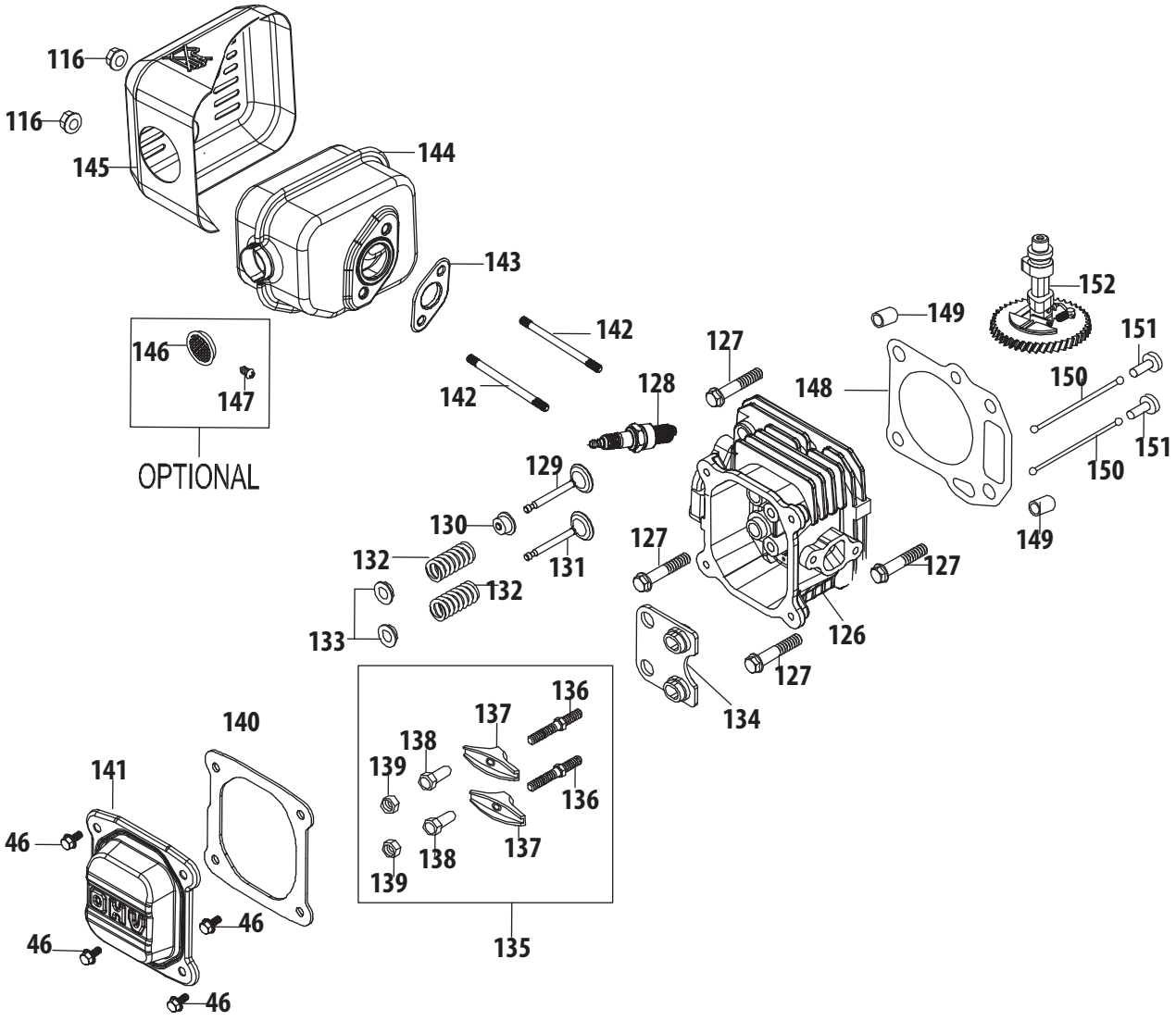

Ref.	Part Number	Description
46	710-04916	Bolt M6X14 Multi-Purpose
116	712-05015	Nut M6X10Mm Starter/Carb/Muff
126	751-14639	Cylinder Head
127	710-06185	Bolt M8X54 Cylinder Head
128	951-14437	Spark Plug/F5Rtc
129	951-14640	Intake Valve
130	721-04237	Intake Valve Seal
131	951-14641	Exhaust Valve
132	951-12004	Valve Spring
133	708-04094	Valve Spring Retainer
134	951-11687	Push Rod Guide
135	951-11606	Rocker Arm Assembly
136	710-04902	Rocker Arm Stud
137	951-12001	Rocker Arm
138	751-11123	Fulcrum Nut

Ref.	Part Number	Description
139	751-11124	Jam Nut
140	951-11551	Valve Cover Gasket
141	951-14609	Valve Cover
142	710-05094	Muffler Stud M6X95
143	951-14427	Muffler Gasket
144	951-10403	Muffler Assembly
145	951-14430	Muffler Shield
146	951-10351	Spark Arrestor
147	710-04983	Spark Arrestor Screw
148	951-14431	Cylinder Head Gasket
149	715-04108	Cylinder Head Dowel Pin Φ10×16
150	747-04862	Push Rod
151	951-14432	Tappet
152	951-11741	Camshaft Assembly

1X65RU Fuel Tank

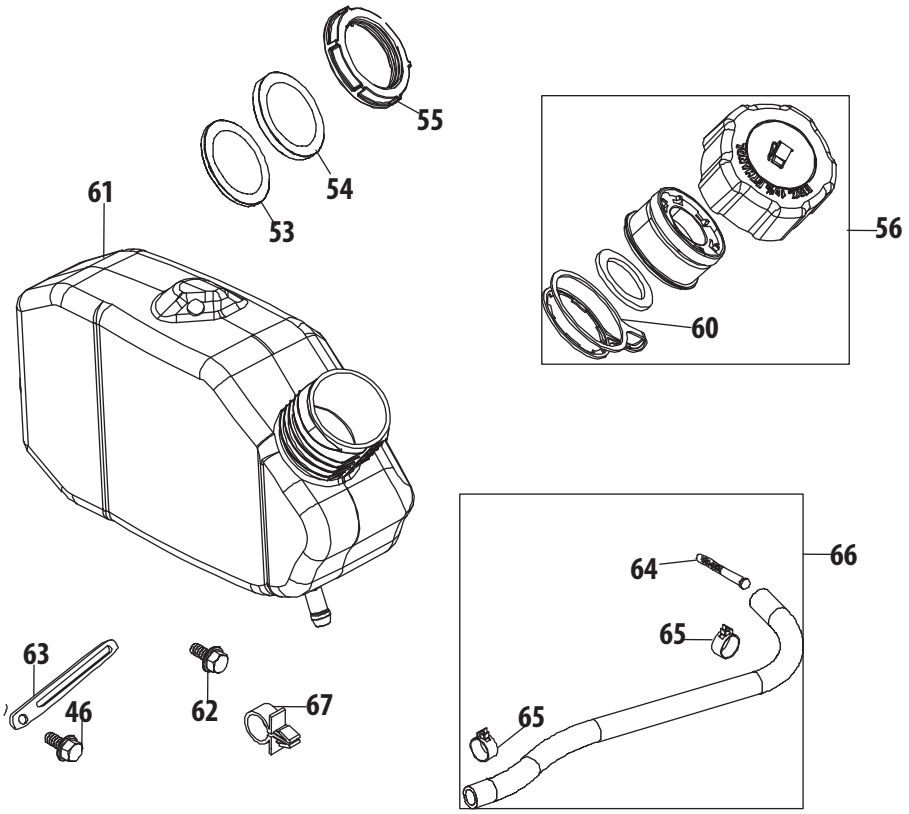

Ref.	Part Number	Description
46	710-04916	Bolt M6X14 Multi-Purpose
53	731-08133	Fuel Tank Lower Grommet
54	951-14406	Fuel Tank Upper Grommet
55	731-08104	Fuel Tank Nut
56	951-14407	Fuel Cap Assembly
60	951-14695	Fuel Cap Tether
61	931-04629	Fuel Tank
62	710-04915	Bolt M6X12 Multi-Purpose
63	951-11680	Flexible Clamp, Vent Hose
64	951-10358A	Fuel Filter
65	951-11700	Fuel Hose Clamp
66	751-14438	Fuel Hose
67	723-04071	Plastic Support Clamp

Engine Model 1T65RUA Air Cleaner

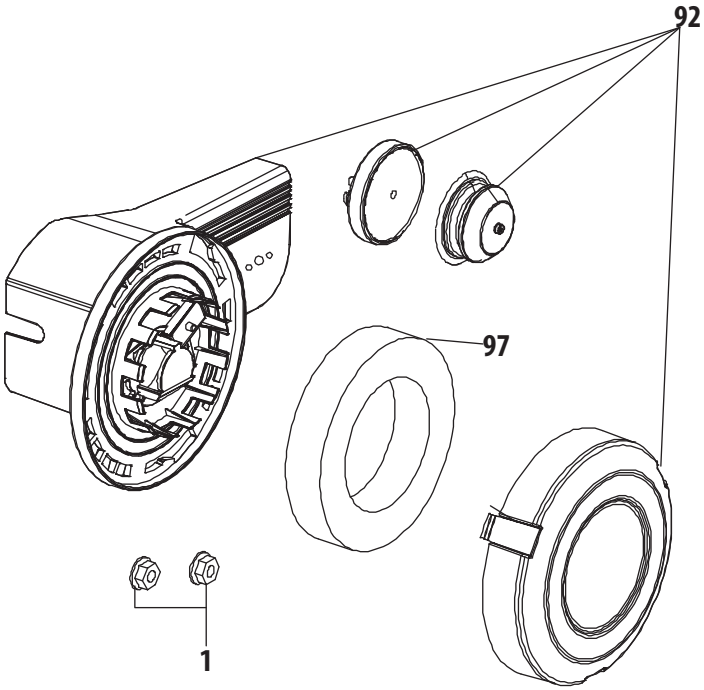

Ref.	Part Number	Description
1	712-05015	Nut M6X10Mm Starter/Carb/Muff
92	651-05226	Air Filter Assembly
97	951-14627	Air Filter Element, Foam

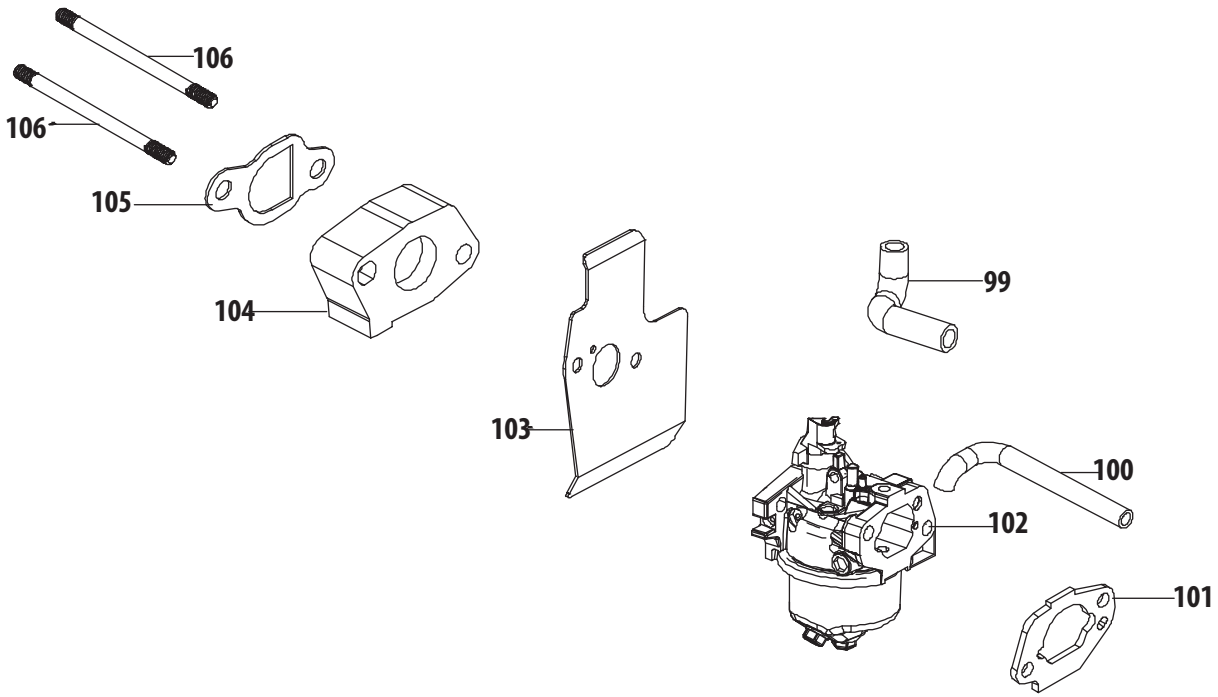

Ref.	Part Number	Description
99	735-05055	Breather Hose
100	735-05056	Primer Hose
101	951-14419	Air Filter Base Gasket
102	651-05221	Carburetor Assembly
102	751-14816	Carburetor Rebuild Kit
103	921-04706	Carburetor Gasket
104	951-14698	Carburetor Insulator
105	951-11528	Carburetor Insulator Gasket
106	710-06205	Carb Stud M6×98

1T65RUA Crankcase

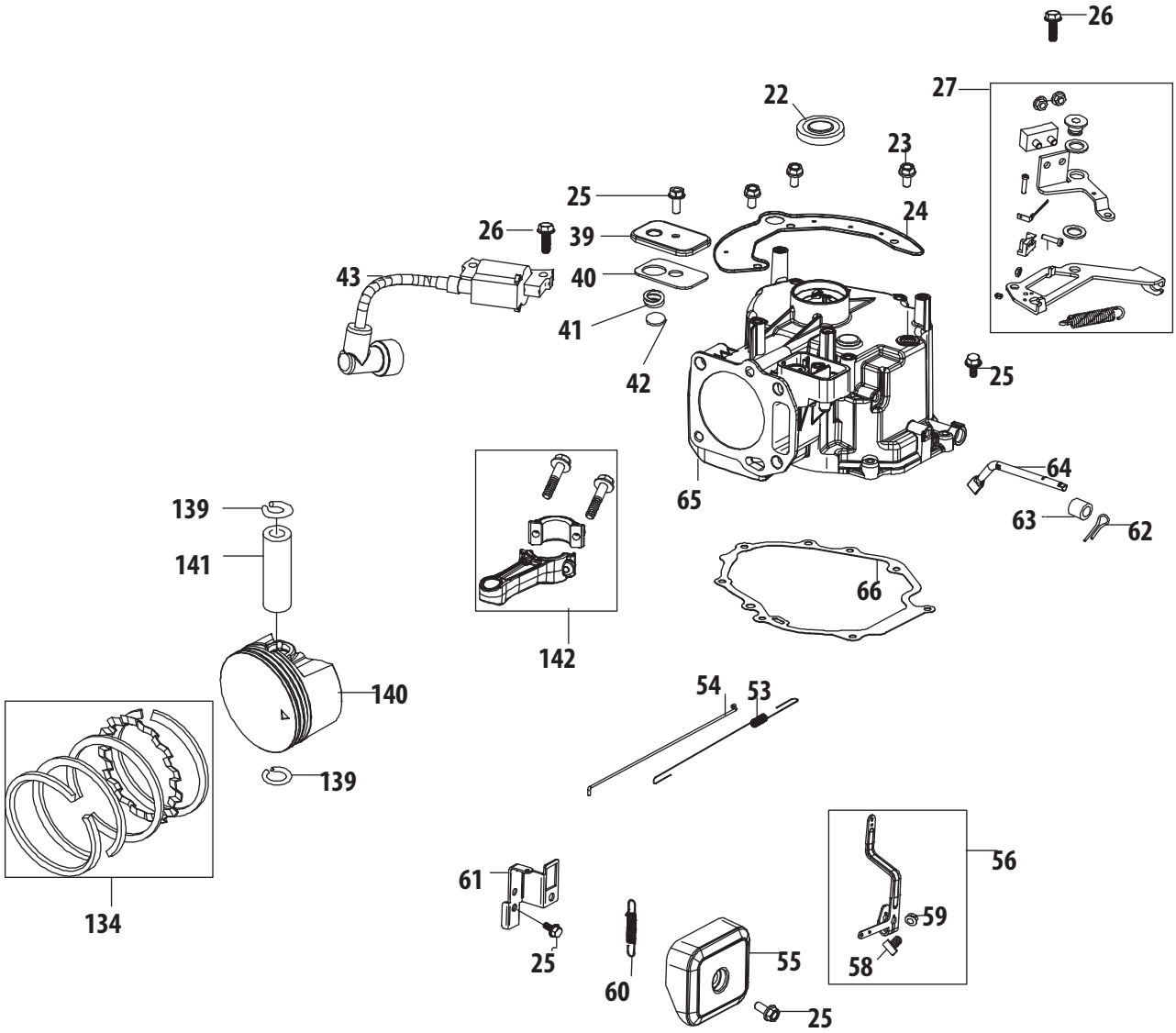

Ref.	Part Number	Description
22	921-04700	Upper Crankshaft Seal
23	710-04914	Bolt M6×10 Shroud Cover Plate
24	908-05091	Shroud Cover Plate
25	710-04916	Bolt M6X14 Multi-Purpose
26	710-04919	Bolt M6×25 Ign/Brake/Cvr Plt
27	951-05166	Brake Assembly
39	908-05092	Breather Cover Plate
40	921-04703	Breather Gasket
41	732-04718	Breather Valve Spring
42	951-11614	Breather Valve
43	925-06193	Ignition Coil Assembly
53	732-05188	Throttle Linkage Spring
54	951-14696	Throttle Linkage
55	931-10287	Governor Shield
56	951-05160	Governor Arm Assembly

Ref.	Part Number	Description
58	710-04908	Governor Arm Bolt
59	712-05015	Governor Arm Nut M6
60	951-14411	Governor Spring
61	908-05093	Component Bracket
62	714-04078	Governor Arm Shaft Cotter Pin
63	951-11574	Governor Seal
64	951-14416	Governor Arm Shaft
65	951-14686	Crankcase
65	651-05159	(Mtd Srvc Kit) Short Block
66	951-14415	Crankcase Cover Gasket
134	951-14433	Piston Ring Set
139	951-11603	Piston Pin Snap Ring
140	951-14434	Piston
141	951-14435	Piston Pin
142	951-05163	Connecting Rod Assembly

1T65RUA Crankshaft & Cover

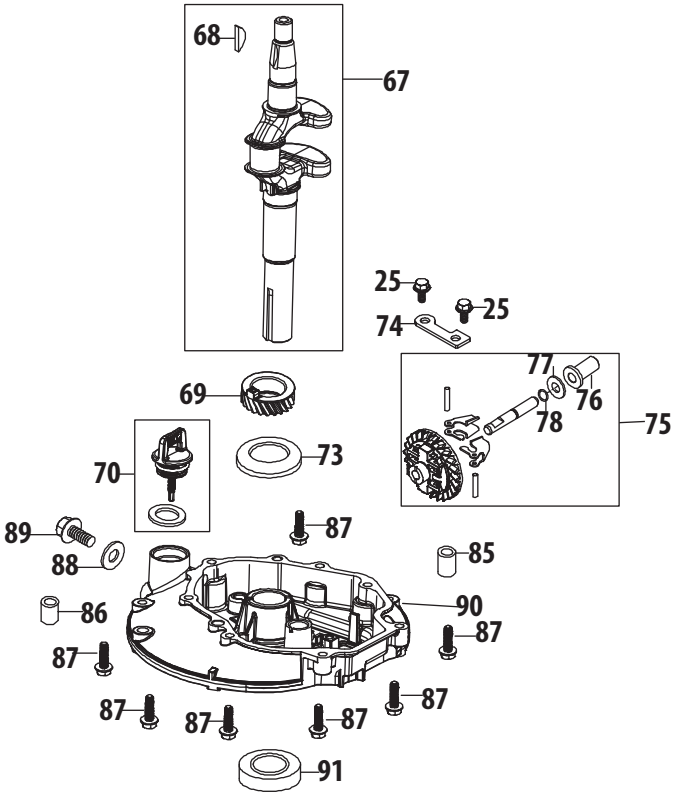

Ref.	Part Number	Description
25	710-04916	Bolt M6X14 Multi-Purpose
67	751-14687	Crankshaft Assembly
68	951-10307	Flywheel Key
69	931-10288	Timing Gear
70	951-05161	Dipstick Assembly
73	736-04491	Crankshaft Thrust Washer
74	951-11609	Governor Gear Mounting Plate
75	951-11549	Governor Gear/Shaft Assembly
76	931-09595	Governor Slide Cap

Ref.	Part Number	Description
77	936-05038	Governor Slide Cap Washer
78	916-05003	Governor Shaft Stop Ring
85	715-04092	Crankcase Cover Dowel Pin 7×14
86	715-04096	Crankcase Cover Dowel Pin 9×14
87	710-04943	Bolt M6X28 T/X/P Multi-Purpose
88	736-04440	Oil Drain Plug Washer
89	710-04906	Oil Drain Plug
90	951-14688	Crankcase Cover
91	951-11545	Lower Crankshaft Seal

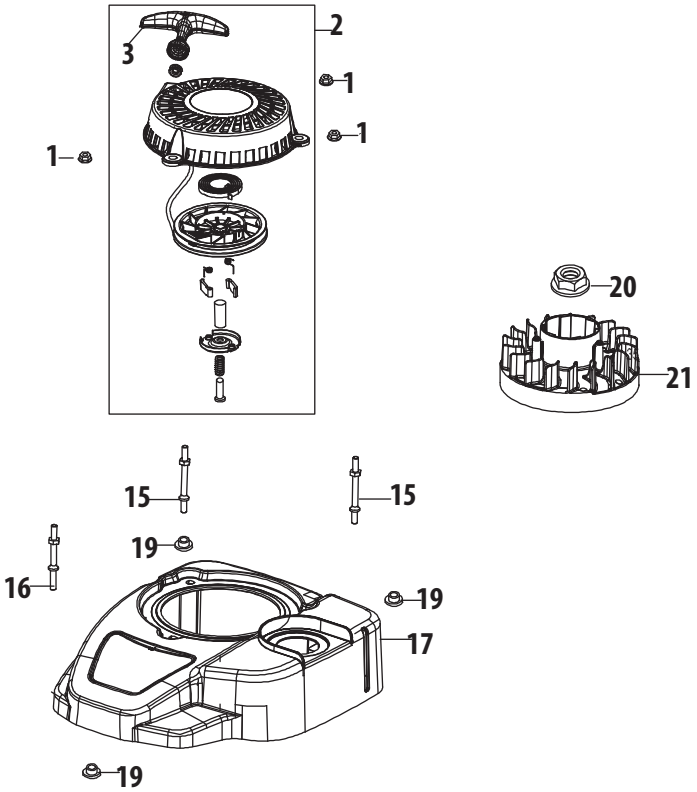

Ref.	Part Number	Description
1	712-05015	Nut M6X10Mm Starter/Carb/Muff
2	951-05167	Starter Recoil Assembly
3	731-07925	Starter Handle
15	710-06208	Starter/Shroud Rear Stud M6×75
16	710-06209	Starter/Shroud Front Stud M6×73
17	631-05196P	Engine Shroud Assembly
19	750-05320	Engine Shroud Spacer
20	712-04287	Flywheel Nut M14
21	925-06190	Flywheel

1T65RUA Cylinder Head

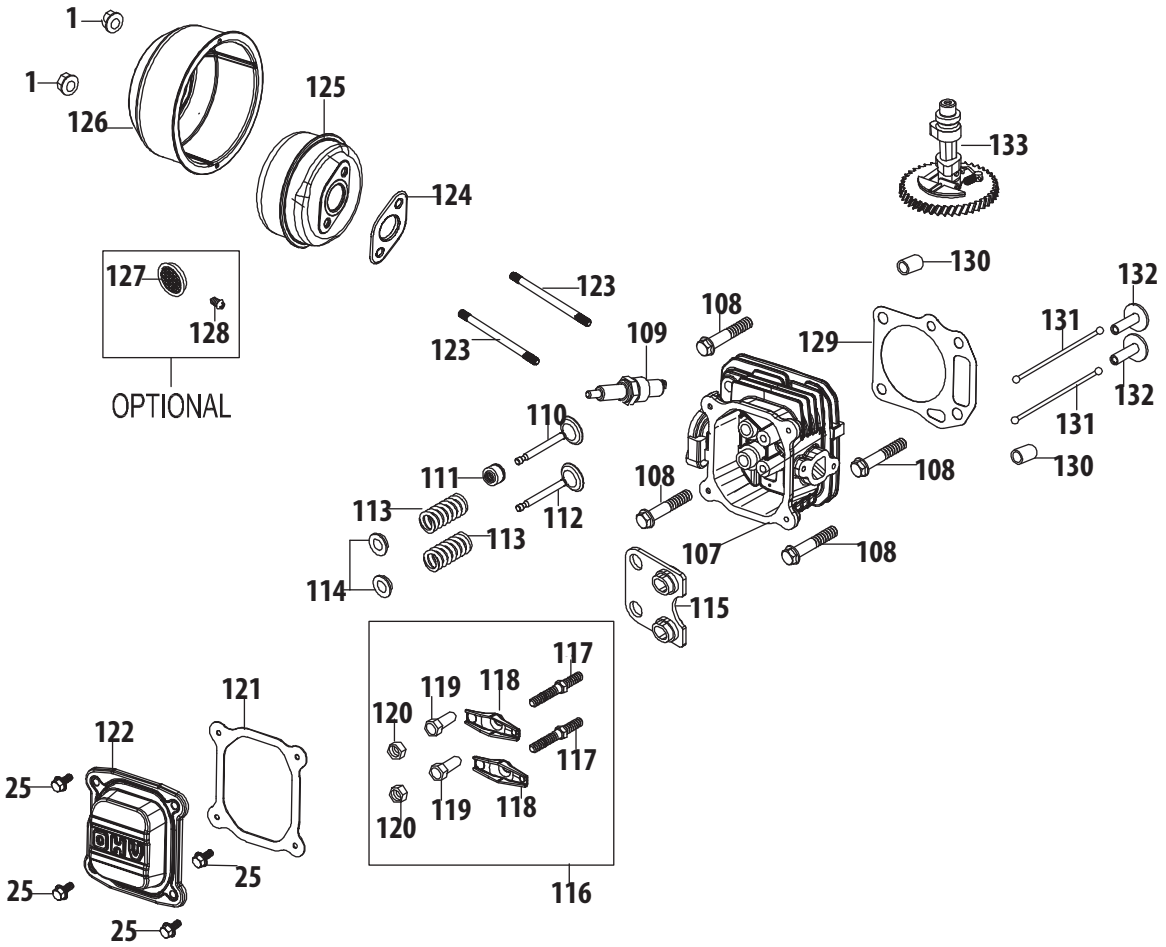

Ref.	Part Number	Description
1	712-05015	Nut M6X10Mm Starter/Carb/Muff
25	710-04916	Bolt M6X14 Multi-Purpose
107	951-05162	(Mtd Srvc Kit) Cylinder Head Assy
107	951-14689	Cylinder Head
108	710-06200	Bolt M8X54 Cylinder Head
109	951-14437	Spark Plug/F5Rtc
110	951-14640	Intake Valve
111	921-04705	Intake Valve Seal
112	951-14641	Exhaust Valve
113	951-12004	Valve Spring
114	708-04094	Valve Spring Retainer
115	951-11687	Push Rod Guide
116	951-11606	Rocker Arm Assembly
117	710-04902	Rocker Arm Stud
118	951-12001	Rocker Arm

Ref.	Part Number	Description
119	751-11123	Fulcrum Nut
120	751-11124	Jam Nut
121	951-11551	Valve Cover Gasket
122	908-05094	Valve Cover
123	710-06204	Muffler Stud M6X76
124	951-14427	Muffler Gasket
125	951-14692	Muffler Assembly
126	751-14693	Muffler Shield
127	951-10351	Spark Arrestor
128	710-04983	Spark Arrestor Screw
129	951-14431	Cylinder Head Gasket
130	715-04108	Cylinder Head Dowel Pin 10×16
131	747-04862	Push Rod
132	951-11607	Tappet
133	951-11741	Camshaft Assembly

1T65RUA Fuel Tank

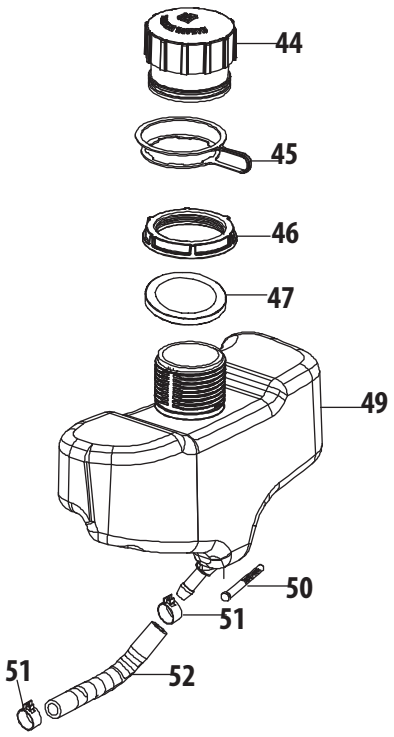

Ref.	Part Number	Description
44	951-14694	Fuel Cap Assembly
45	951-14695	Fuel Cap Tether
46	931-10290	Fuel Tank Nut
47	951-14406	Fuel Tank Upper Grommet
49	931-10291	Fuel Tank
50	951-10358A	Fuel Filter
51	951-11700	Fuel Hose Clamp
52	735-05053	Fuel Hose

Notes

To order replacement parts or locate your nearest service dealer call a Customer Support at (800) 800-7310.
or visit www.mtdproducts.com to find the nearest authorized dealer in your area.

MTD LLC, P.O. BOX 361131 CLEVELAND, OHIO 44136-0019