teamson®
home

Extended Warranty
Sign Up

E-2

Welcome home!

EHF-F0019

TEAMSON HOME
Mercer Wall Mounted Cabinet

Warranty

LIMITATIONS
All components are warranted by the manufacturer for 30 days after the date of purchase by the original owner against defects in materials and workmanship under normal use. If it is appropriate to replace your product due to specific defects, the manufacturer will replace the purchase with the same or comparable product.

GENERAL TERMS & CONDITIONS
1.Proof of purchase is required to request a claim under this warranty.

2.This warranty applies only to manufacturer error and defects. The warranty applies to the following:
a.Breaks and cracks in the product that originated with the manufacturer.
b.Missing pieces.
c.Stains that occurred during the manufacturing process.

3.This warranty does not apply to the following:
a.Damage due to improper loading, handling, or transportation.
b.Any costs associated with the installation and removal of products or parts subject to this warranty.
c.Acts of God.
d.Products which have been subject to negligence, abuse, accident, misapplication, tampering, alteration, or modification.
e.Products which have been subject to improper installation, operation, maintenance, repair, or storage.
f.Products which have been subject to defects that occur when this product is used incorrectly and /or outside of normal application purposes.
g.Products that have had, including but not limited to, operational failures caused by corrosion, rust, or other foreign materials in the system, or operation at pressures over recommended maximums.
h.All other possible defects not mentioned here that would not have occurred during manufacturing or during correct, routing use of the item.

INSTRUCTIONS
For specific instructions on how to obtain warranty service for your product, please contact Global Customer Support using the contact information provided on page 01. In most circumstances, you will need to return your product either in its original packaging or in equally protective packaging to the address specified by Global Customer Support.
Before delivering your product for warranty service, it is your responsibility to remove all personal items and belongings you have stored with our product. Teamson is not responsible for the possible loss, destruction, or damage of any personal items or belongings that have been sent with the product.

DISCLAIMER
Any oral statements made about the product by the seller, the manufacturer, the representatives, or any other parties do not constitute warranties should not be relied upon by the user and are not part of the contract for sale. The seller’s and manufacturer’s only obligation, and buyers only remedy shall be for the manufacturer to either replace and/or repair at the manufacturer's sole discretion, the product as described above. Neither seller not the manufacturer shall be liable for an injury, loss, or damages for lost profits, lost sales, injury to person or property, or any other incidental or consequential loss arising from any cause whatsoever, no matter whether based upon warranty, contract, negligence or other misuse, and the buyer and user agree that no other remedy shall be available to them. Before using the buyer and user shall determine the suitability of the product for intended use and assume all risk and liability whatsoever in connection therewith. The warranty and remedy described in this limited warranty is an exclusive warranty and remedy instead of any other warranty or remedy expressed or implied. All other warranties and remedies are hereby expressly excluded, including but not limited to any implied warranty of merchantability of fitness for any particular purpose.

OTHER LEGAL RIGHTS
The warranty gives the buyer and user specific legal rights, and the buyer and user may also have other rights which vary for state to state. Some states do not allow exclusions or limitations or incidental or consequential damages, so the above limitations or exclusions may not apply to you.

THANK YOU
We appreciate the trust and confidence you have placed in Teamson through the purchase of this product. We strive to continually create quality products designed to enhance your home and life. Visit us online to see our full line of products available for your home décor, toy, and pet needs. Thank you for choosing Teamson!

Global Customer Support

USA / CA

✉ **support@teamson.com**
+1(770) 246-4898
Mon - Fri 9 AM - 4 PM EST

EU / UK

✉ **support@teamson.co.uk**
+44(0)1952-916-050
Mon - Thur 9 AM - 5 PM GMT
Fri 9 AM - 4 PM GMT

ASIA

深圳办公室：
✉ **sales_ec@teamson.com**
+86(0755)8885-3558.分机号108
Mon - Sat 9 AM - 5 PM GMT+8

台北辦公室：
✉ **support@teamson.com.tw**
+886 2 2558 0755 ext. 318
Mon - Fri 9 AM - 5 PM GMT+8

AU

✉ **support@teamson.com.au**

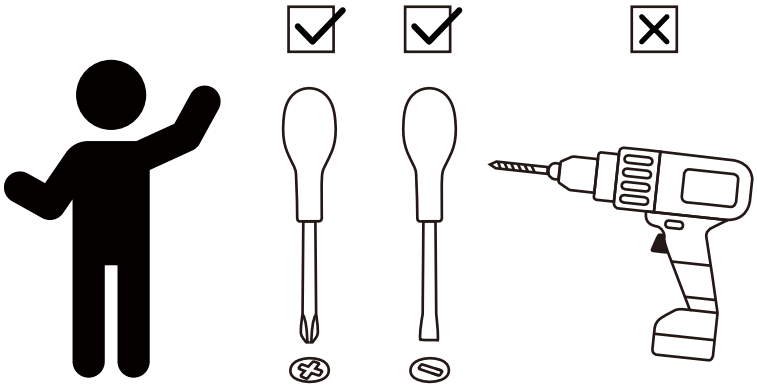

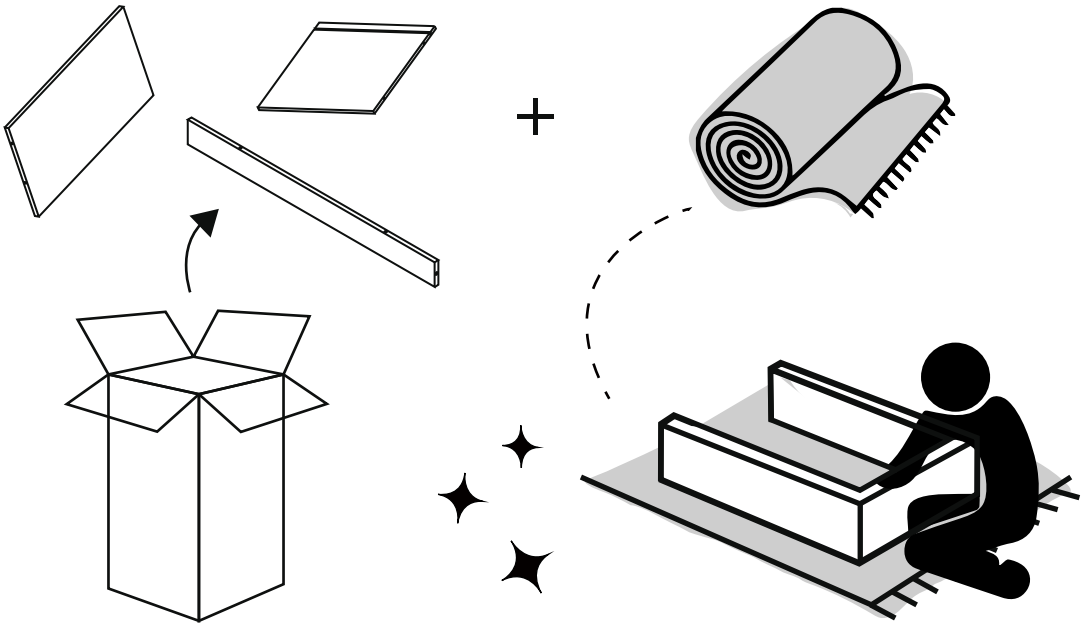

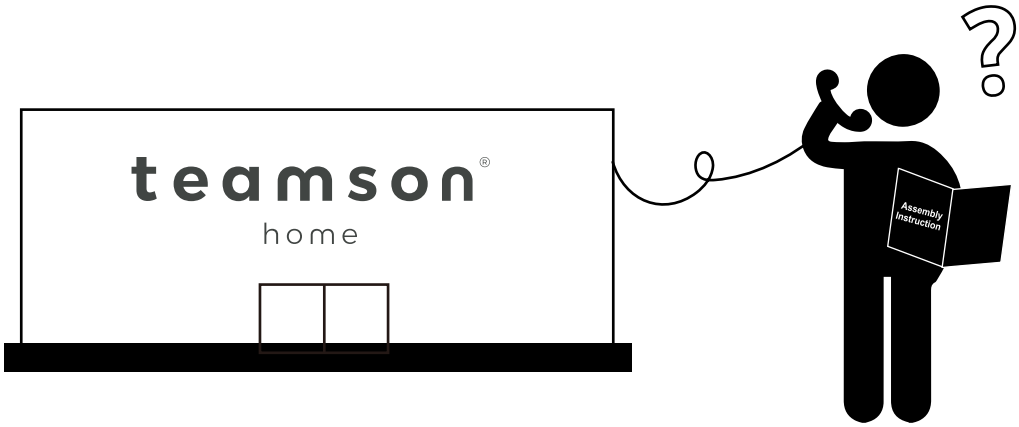

** Got questions? Please have your product code (on the first page of this instruction, e.g. TD-12345A) and the order number ready, give us a call or email us through our customer care support! We are always ready to assist you!

Exploded Drawing

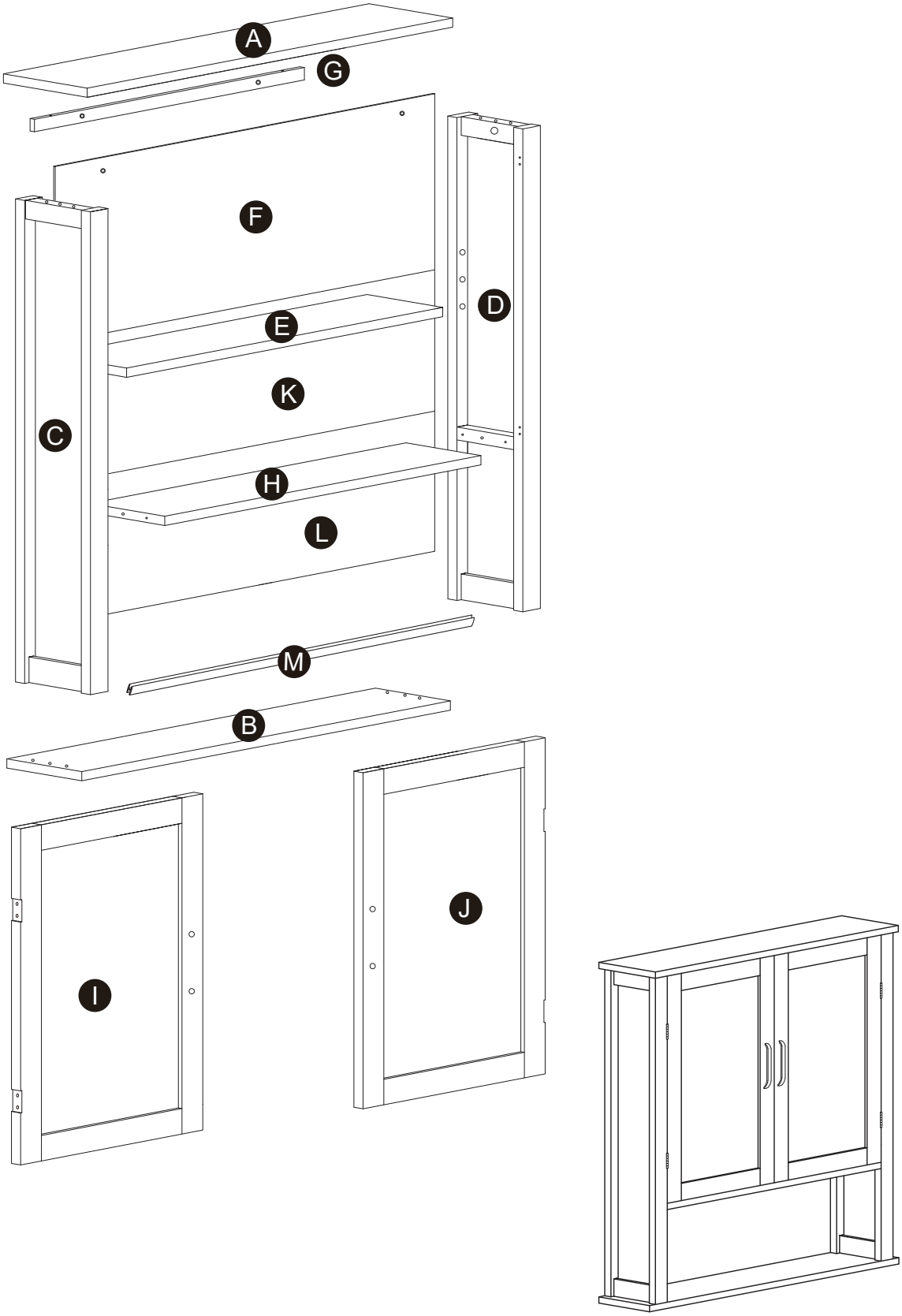

Scan for assembly instructions.

Product Parts

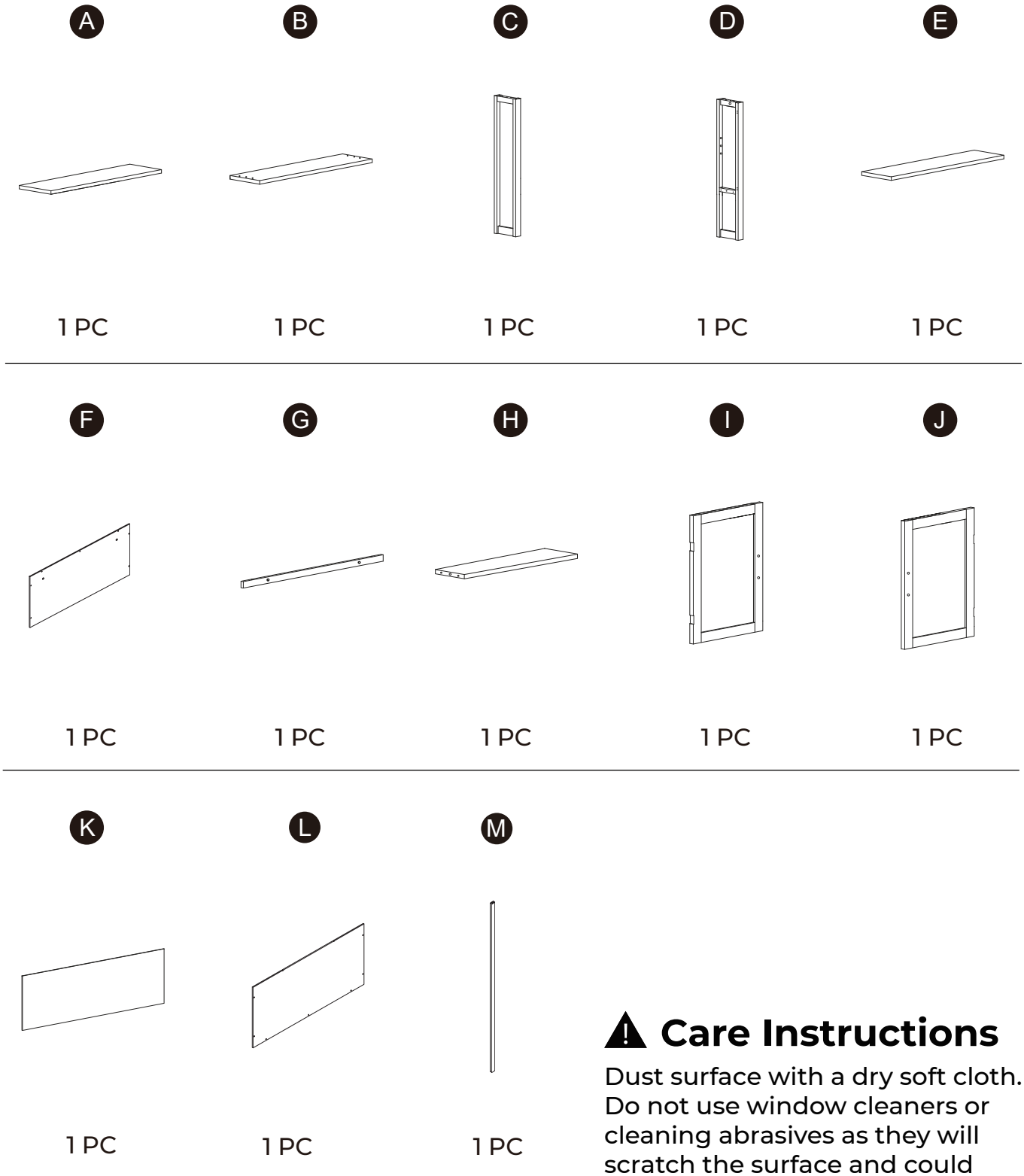

⚠ Care Instructions

Dust surface with a dry soft cloth. Do not use window cleaners or cleaning abrasives as they will scratch the surface and could damage the protective coating

Scan for assembly instructions.

⚠ WARNING

Small parts and sharp edges may be present prior to assembly.

Hardware

1	2	3	4	5	6
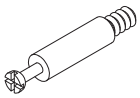	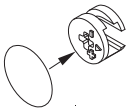		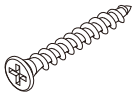		
	Ø15*9		Ø4*40mm	Ø3*12mm	Ø3*10mm D=7
6 PCS	6 PCS	4 PCS	4 PCS	8 PCS	20 PCS

7	8	9	10	11	
	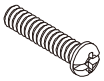	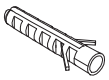	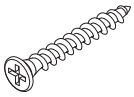	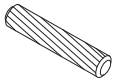	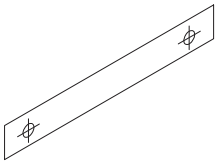
	5/32”*19mm		Ø4*38mm	Ø6*30mm	
2 PCS	4 PCS	2 PCS	2 PCS	10 PCS	

Scan for assembly instructions.

Step 1

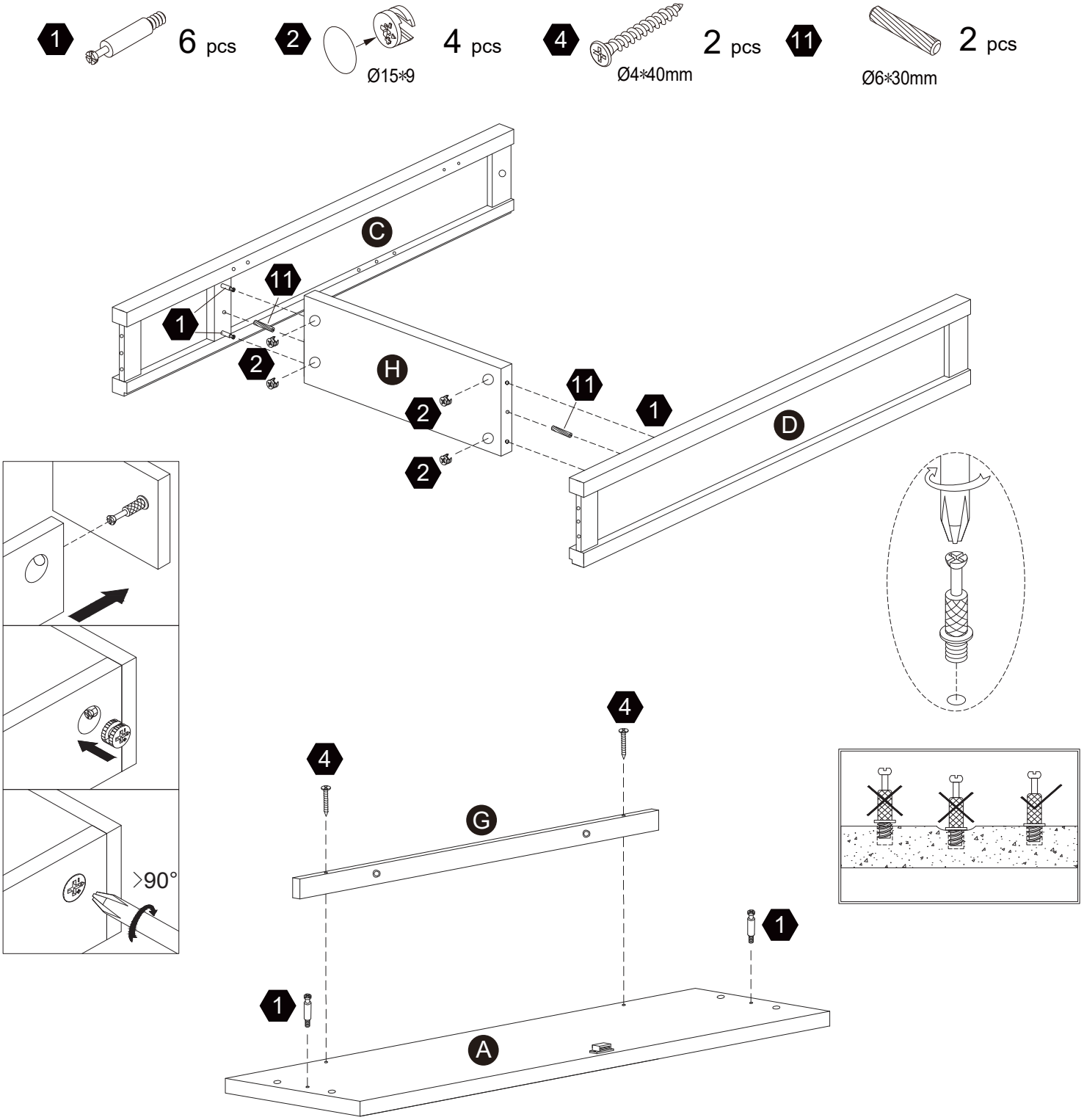

Scan for assembly instructions.

Step 2

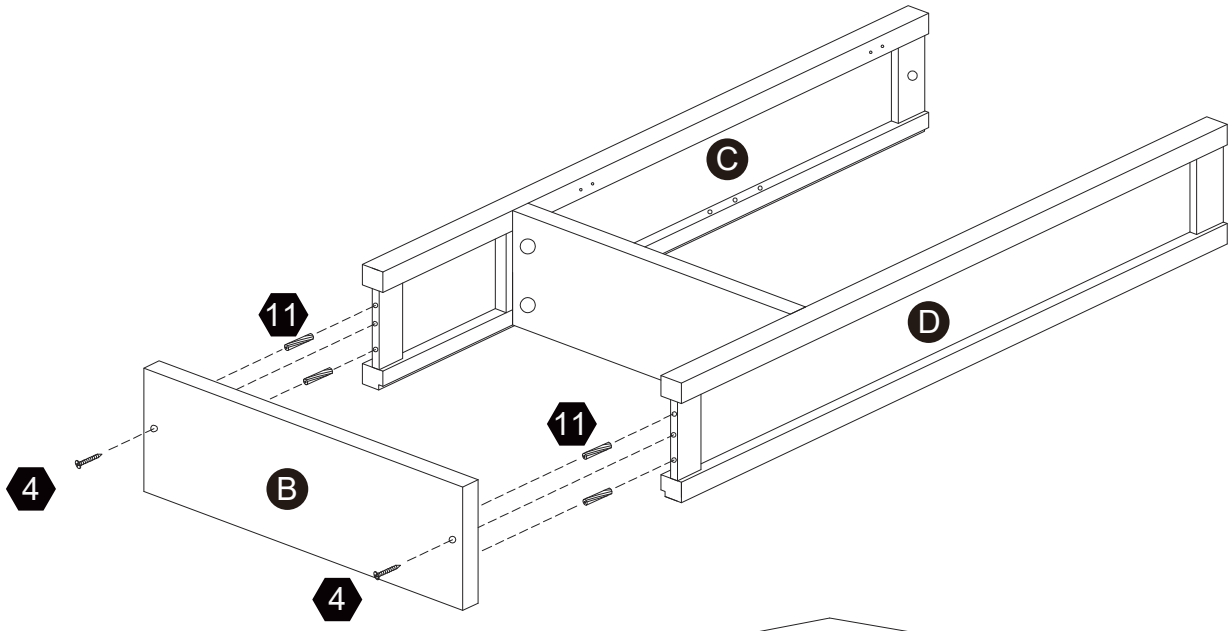

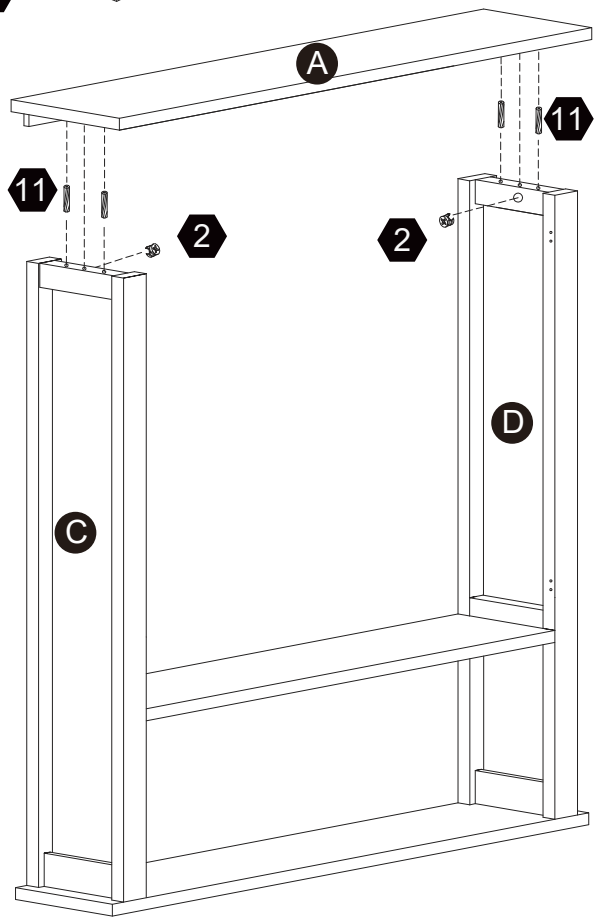

Scan for assembly instructions.

Step 3

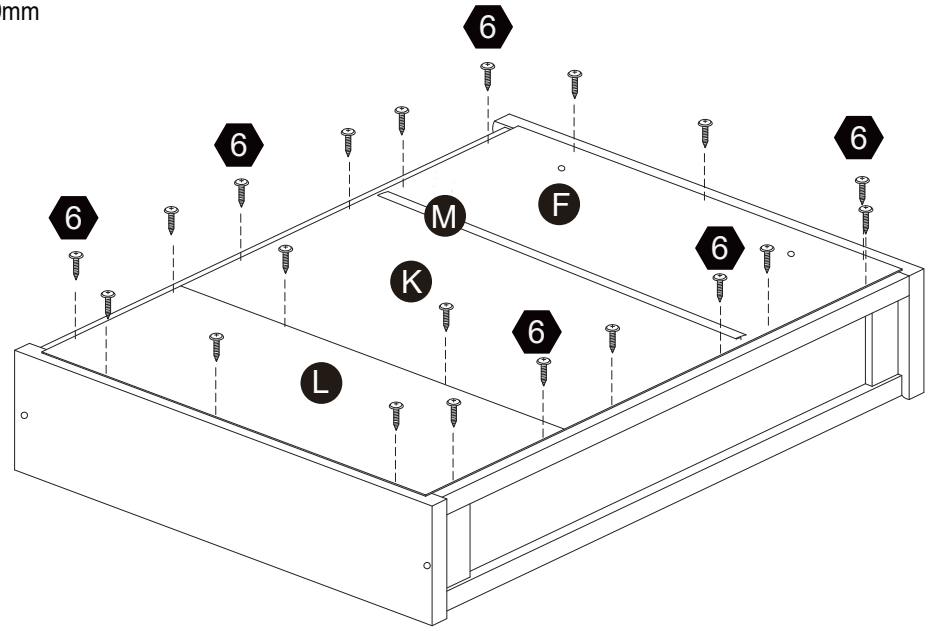

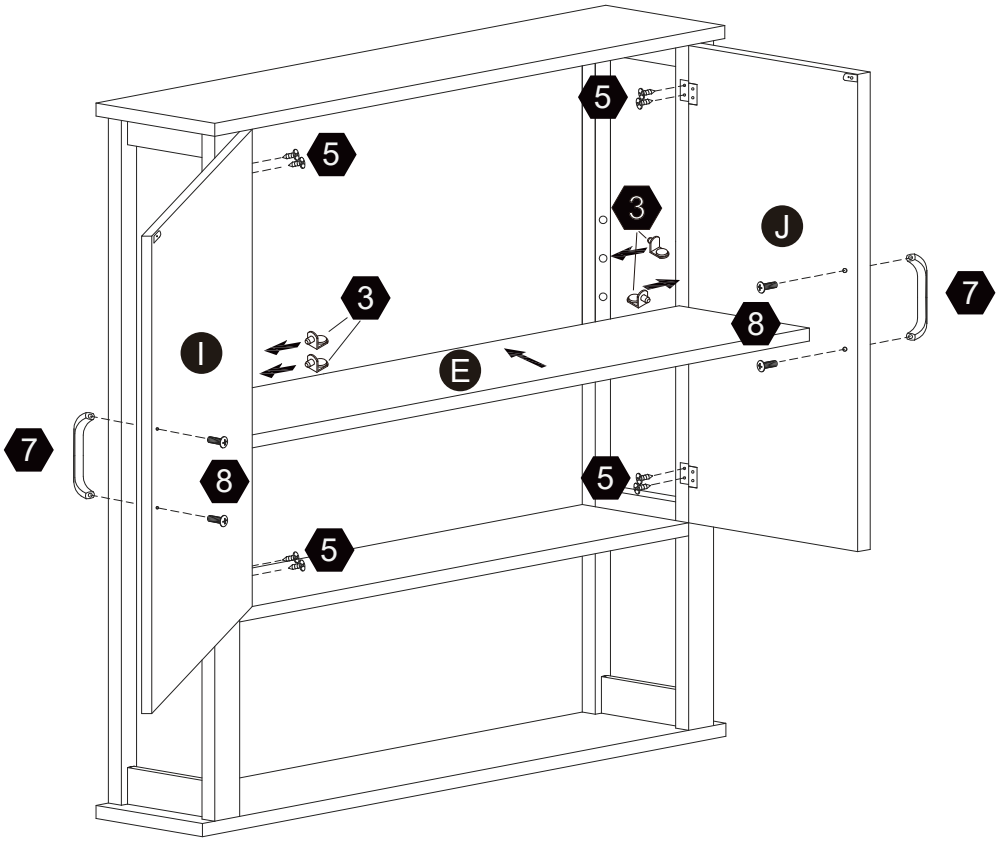

Scan for assembly instructions.

Step 4

9 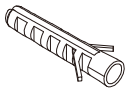 2 pcs 10 2 pcs

Ø4*38mm

Warning:
Serious or fatal injuries can occur from furniture tip-over. To help prevent furniture tip-over:
Use provided mounting hardware to secure furniture to the wall.
This may reduce but not eliminate the risk of furniture tip-over.
Do not allow children to climb on furniture.

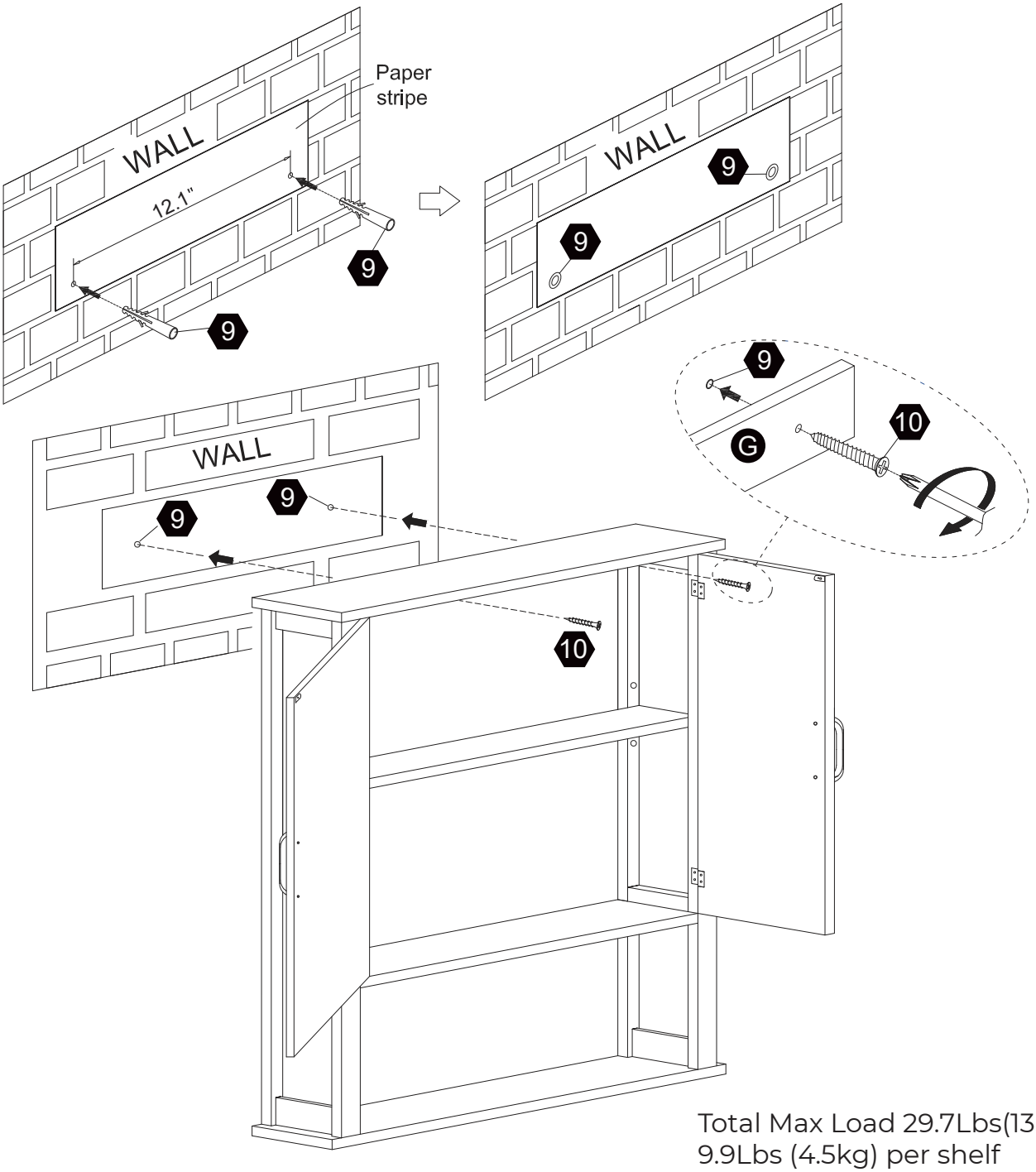

Total Max Load 29.7Lbs(13.5kg)
9.9Lbs (4.5kg) per shelf

Scan for assembly instructions.

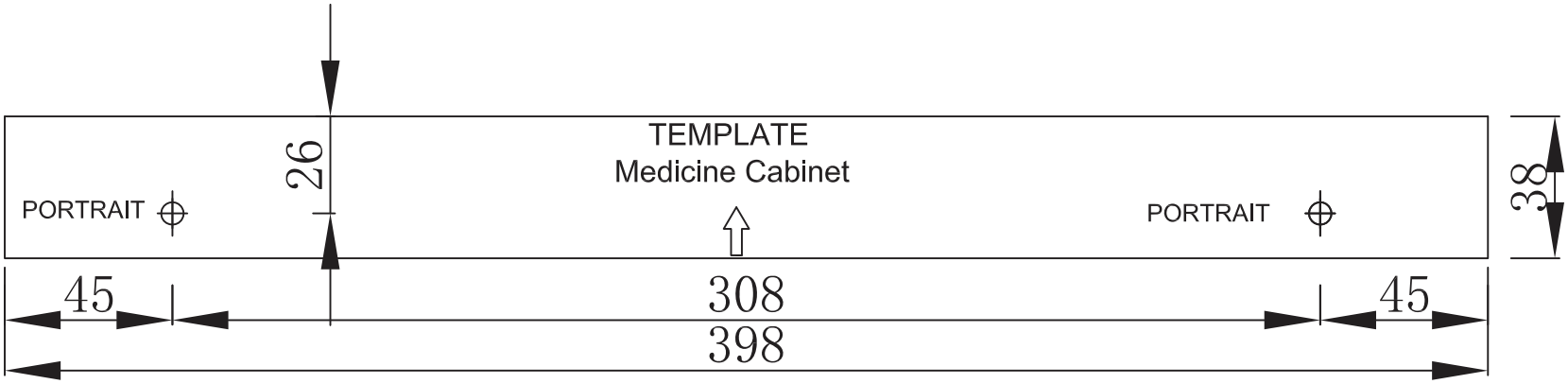
TEMPLATE
Medicine Cabinet
PORTRAIT
PORTRAIT
26
38
45
308
45
398