MIRROR CABINET 42″

MIRROR CABINET

SKU: MED42YS1WT
MED42YS1TG
MED42YS1NB

Colors/Finishes: White,Titanium Grey,Navy Blue

Nominal Dimension:42W*5.9D*30H inches

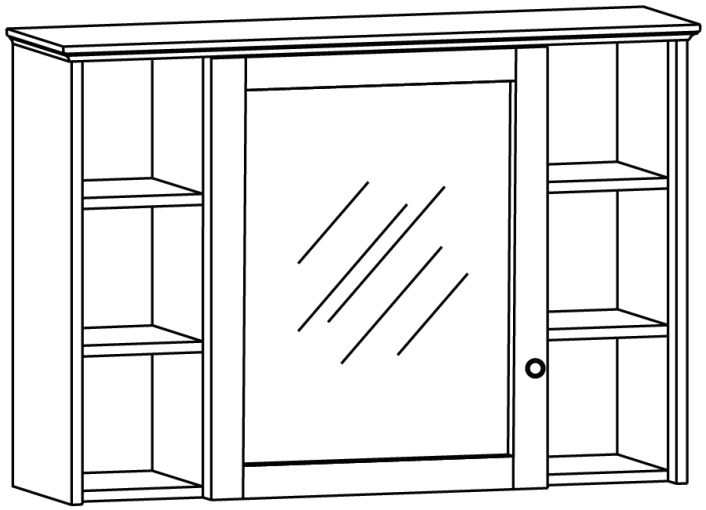

FEATURES:

- Durable solid popular wood frame
- 1 soft-close door
- Z-bar hangs vertically
- 4 wood shelves outside
- 1 wood shelves inside
- Metal alloy hardware with decorative porcelain
- Austria BLUM soft-close hinges system

PRODUCT DIAGRAMS:

Front

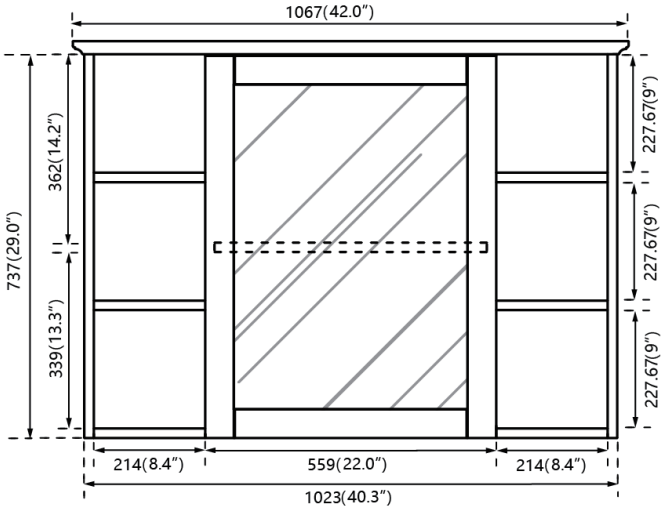

Back

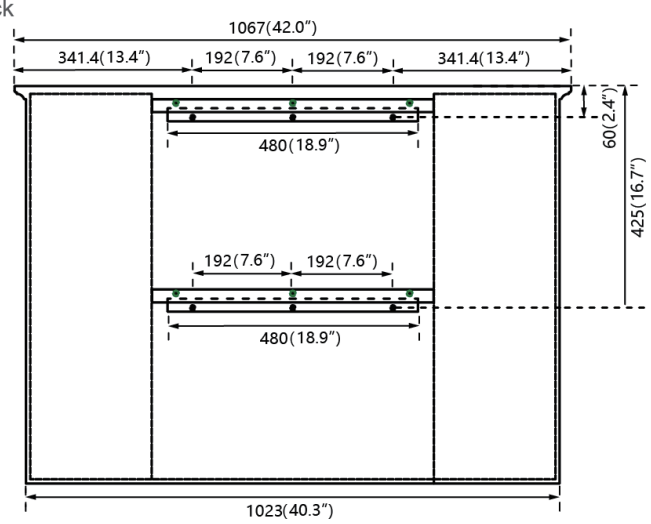

Side

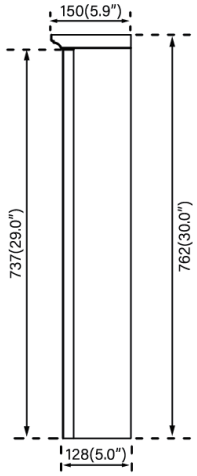

Top

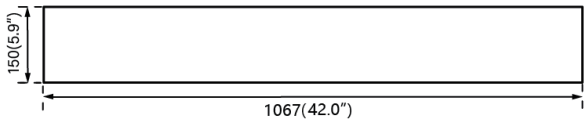

All dimensions and specifications are nominal and may vary.Use actual products for accuracy in critical situations.

MIRROR CABINET INSTALLATION

SUGGESTED TOOLS AND MATERIALS:

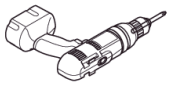
Electrical Drill


1/8” Drill Bit


Pencil


Phillips Screwdriver


Tape Measure

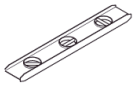
Level


Safety Glasses

INSTALLATION INSTRUCTLONS

We recommend consulting a professional if you are unfamiliar with installing bathroom fixtures and plumbing .We accept accepts no liability for any damage to the floor,medicine cabinet,vanity cabinet, sink,counter top,or personal injury during installation.

PART LIST:


SCREW
x6

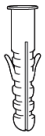
WALL PLUG
x6

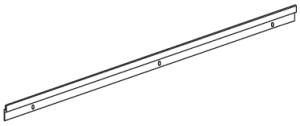
SUPPORTING BAR
x2

⚠ **NOTE**: Determine overall mirror dimensions before installation.
Requires two(2) person in installation.

Accessories and parts may vary from the picture above.Depends on the product model and size.

PLANNING ASSEMBLY

Check the cabinet for damage before installation. If any part of the cabinet is missing or damaged, contact the Customer Service Team at 206.809.0093.

Ensure that the cabinet location is accessible to water supply and drain lines. It is suggested that you rough-in the water lines and drain before installing the cabinet.

INSTALLATION GUIDELINES

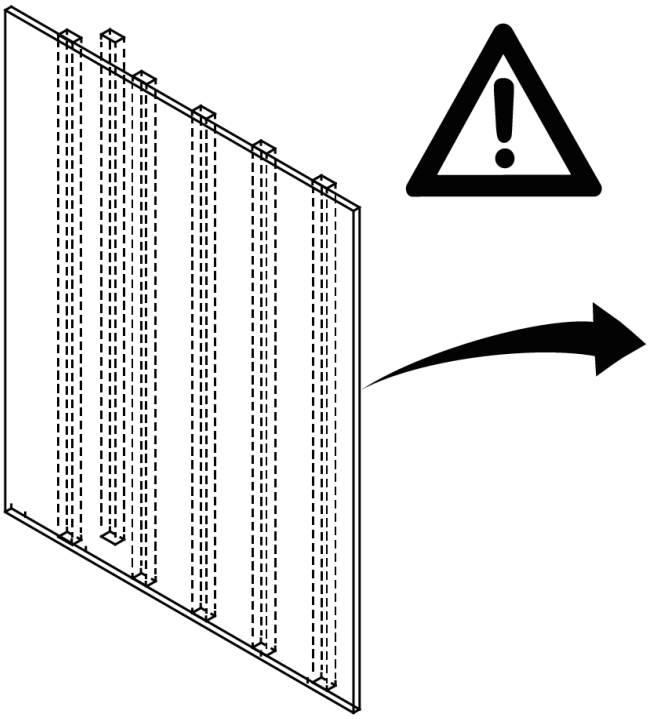

When installing this product, the screws should reach the wood studs behind the plasterboard wall. It is not recommended to install on a plasterboard wall if the screws and anchors are not secured in the wood studs.

Note: cabinet size, style and shape may vary from the picture above.Instructiona purpose only

ASSEMBLY INSTRUCTION

1.Locate Studs

Measure the place where the cabinet will be located, Use a stud finder to locate the wood studs behind the wall where you intend to hang the mirror cabinet.

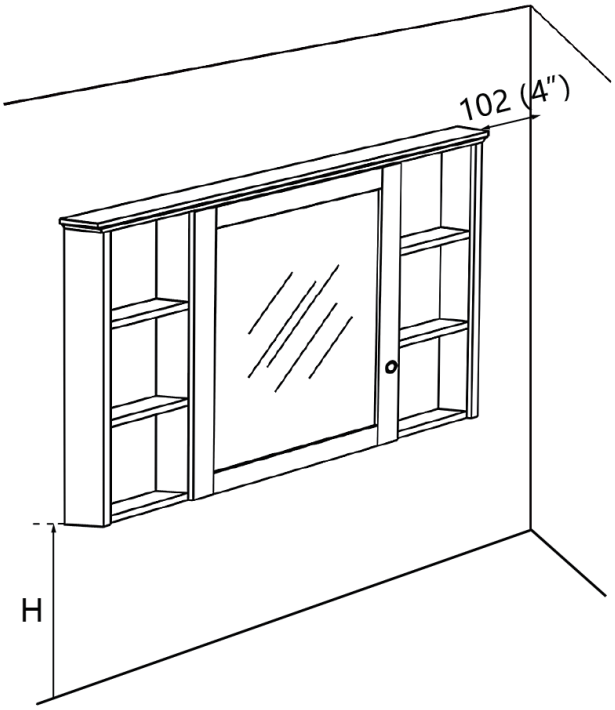

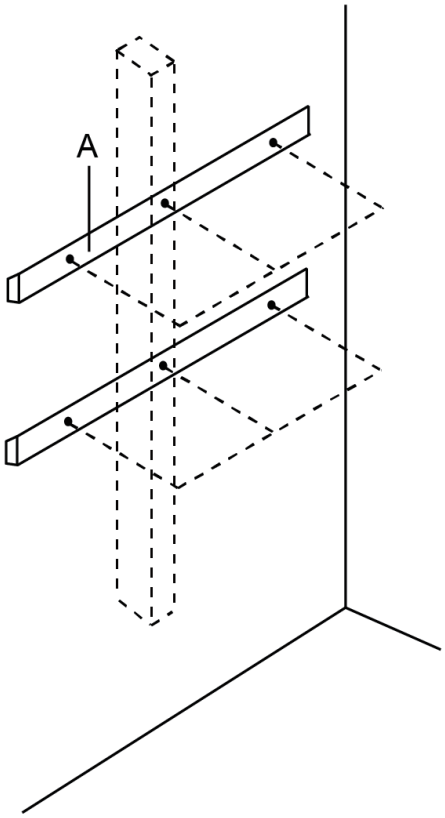

2.Attach Hanging Bars

Place the two support bars (A) against the hanging bars(B) on the back of the mirror cabinet.Hold them in place manually, meausure the distance (C) between the hanging bars on the mirror cabinet to determine their alignment on the wall.

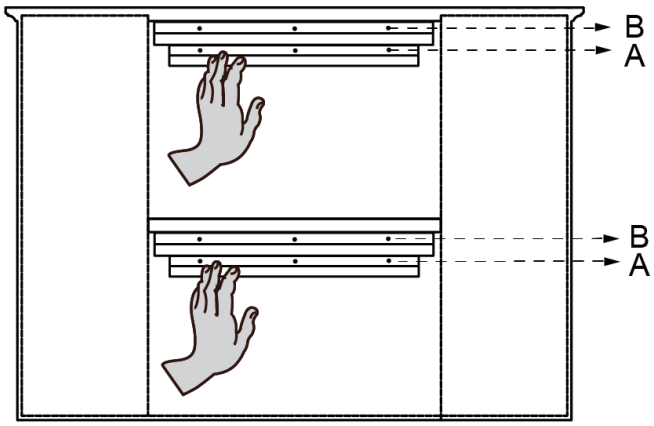

A:support bar accessories

B:hanging bar on the back of cabinet

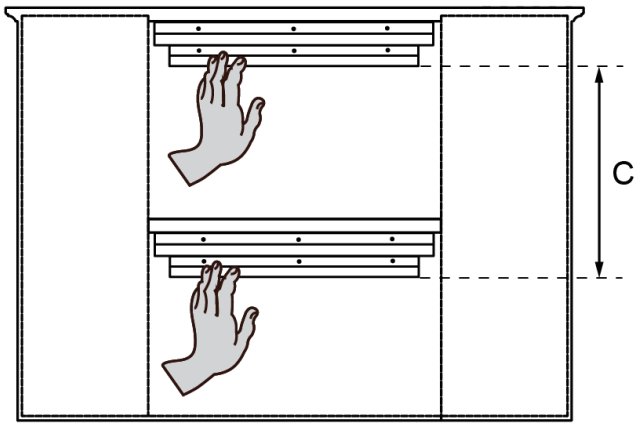

C: distance between supporting bars

Note: cabinet size, style and shape may vary from the picture above.Instructiona purpose only

ASSEMBLY INSTRUCTION (continued)

3.Mark the Wall

Remove the support bars(A) from the mirror cabinet hanging bar(B), While holding the support bars(A) in its position against the wall, check that it is level, then mark 3 positions for 3 holes as indicated.

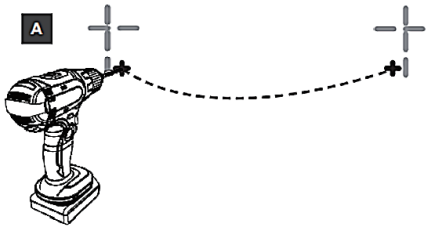

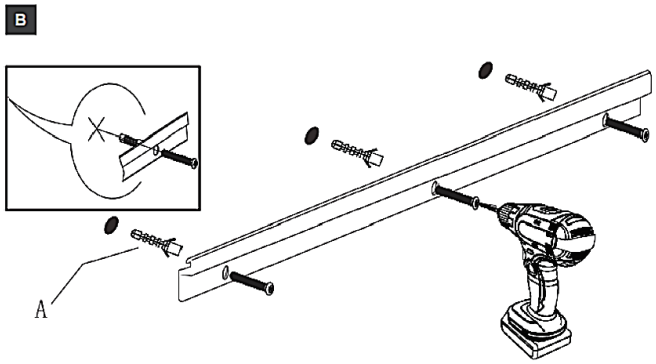

Ensure that the vertical distance(D) between the two support bars on the wall matches the vertical distance (C) previously measured between the two hanging bars on the back of the mirror cabinet.This will ensure proper alignment during installation.

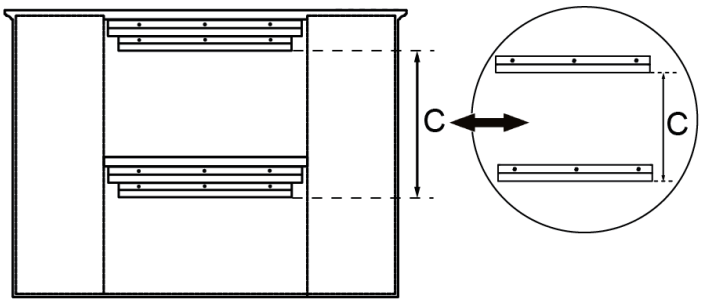

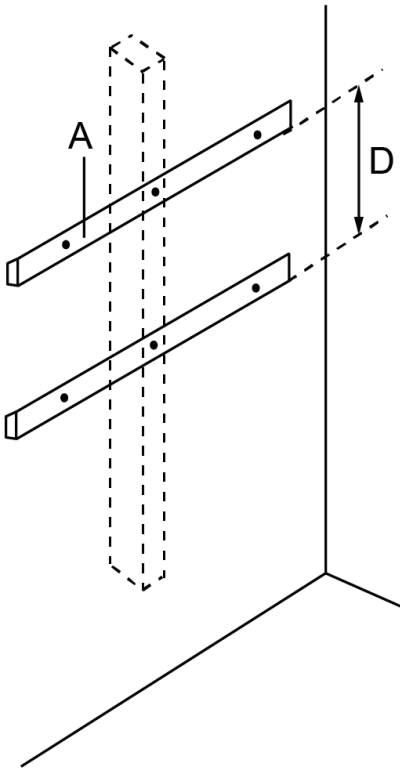

*Note: C=D

4.Hanging on the Cabient

Hang the mirror cabinet on the support bars(A), Gently test the stability of the cabinet by applying slight pressure.It should fell secure and stable.

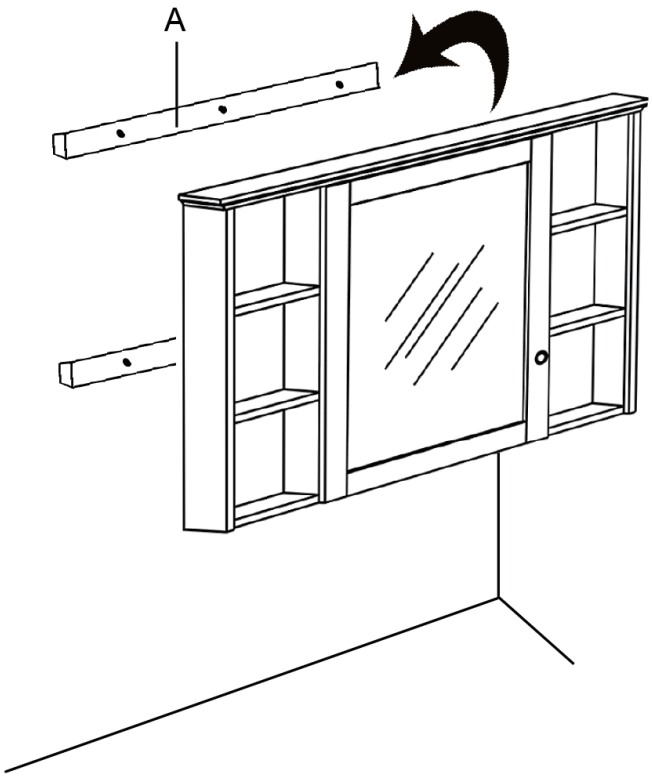

Note: cabinet size, style and shape may vary from the picture above.Instructiona purpose only