NAMEEK'S

Etra
Scarabeo 5212
Wall Mounted Bathroom Sink

Features

- With overflow.
- Modern design.

Material

- White ceramic bathroom sink.

Installation

- Wall mount installation.

Configurations

- Single Hole.
- Three Hole (8-inch centers).



ADA

Nameek's One-Year Limited Warranty

See website for warranty information details.

NAMEEK'S

Etra
Scarabeo 5212
Wall Mounted Bathroom Sink

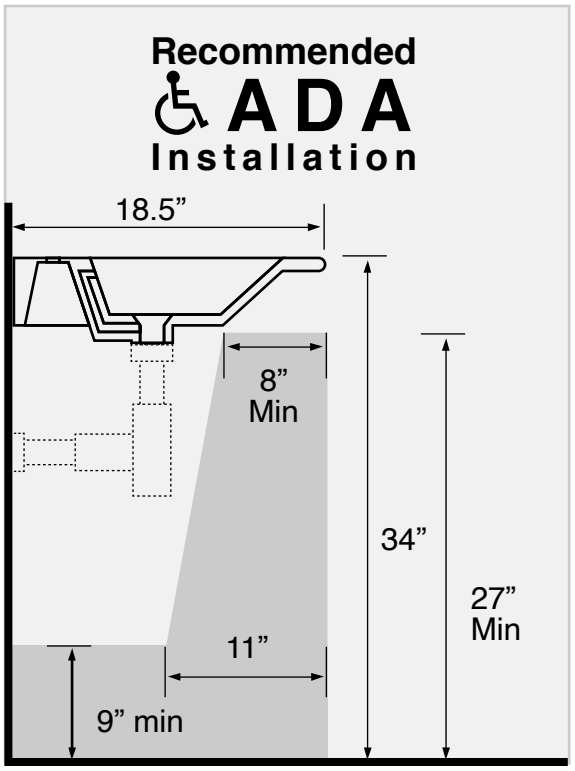

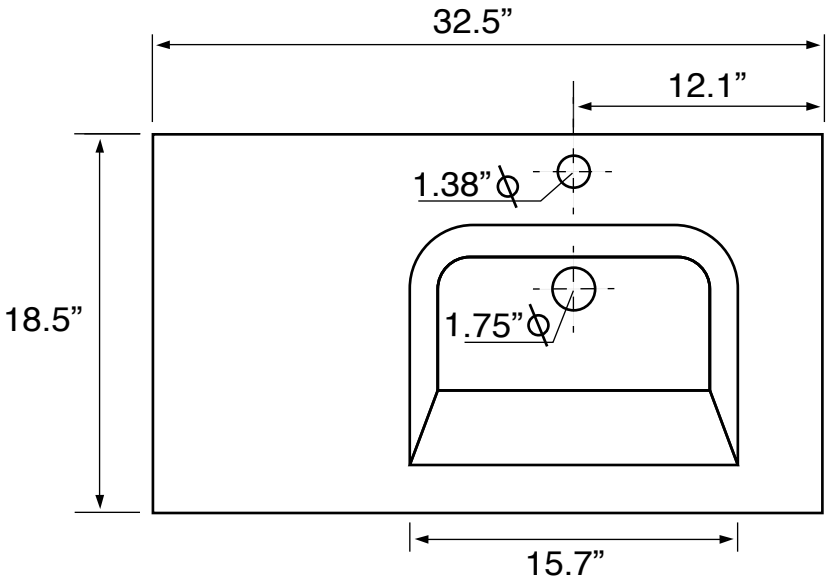

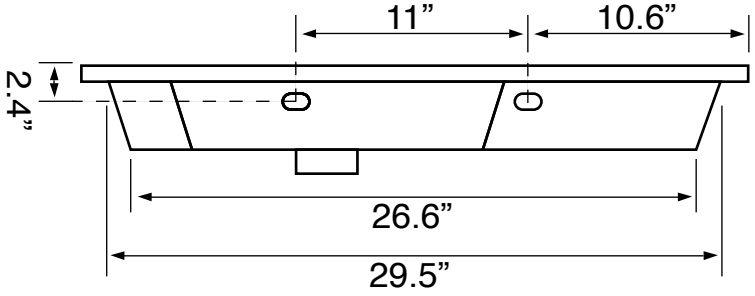

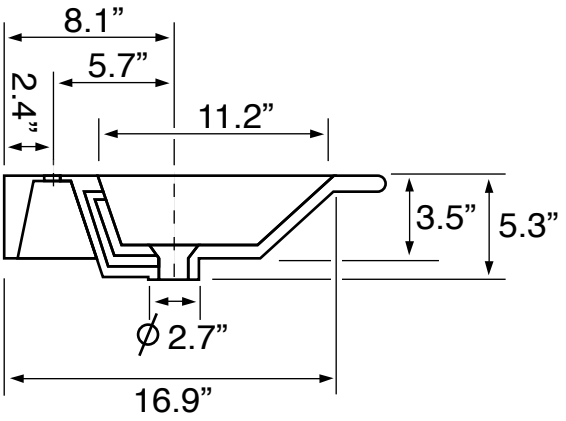

Technical Information

Bowl type:	Single
Installation:	Wall mounted
Bowl dimensions:	Length: 15.7”
	Width: 11.22”
	Depth: 3.5”
Drain hole:	1.75”
Faucet hole:	1.38”
Hole configurations:	1, 3
Weight:	41 lbs

Notes

Install this product according to the installation instructions.

ADA compliant when installed to the specific requirements of these regulations.

Includes mounting hardware.