KOHLER®

Forté®
One-light sconce
K-11365

Features
- Frosted-glass shade
- Sconce can be positioned up or down, depending on room setting
- Coordinates with Forté® faucets, accessories, and showering components to complete your bathroom
- Includes installation hardware
- Suitable for damp locations, per UL 1598
- Fixture is dimmable when paired with dimmer switch and compatible bulbs

Material
- Premium metal construction for durability and reliability
- KOHLER finishes resist corrosion and tarnishing



Codes/Standards
UL 1598
cETL Listed
ETL Listed

KOHLER® Faucet Lifetime Limited Warranty
See website for detailed warranty information.

KOHLER®

Forté®

One-light sconce

K-11365

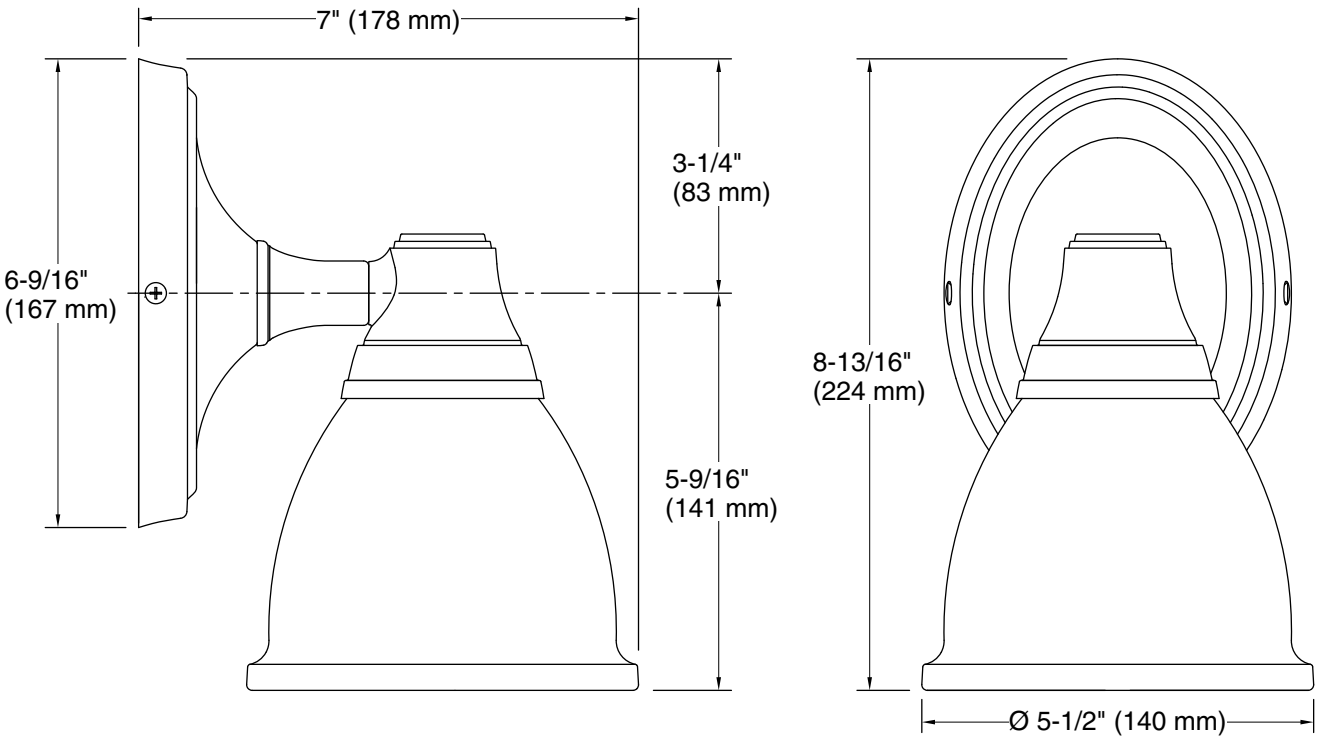

Required Electrical Service

0.833 A

Technical Information

All product dimensions are nominal.

Material:	Metal, Glass
Number of Lights:	1
Lighting Type:	Socket-based
Number of Shades:	1
Shade Type:	Frosted Glass
Hanging Type:	Non-hanging

Notes

Install this product according to the installation instructions.