ONLY FOR REFERENCE

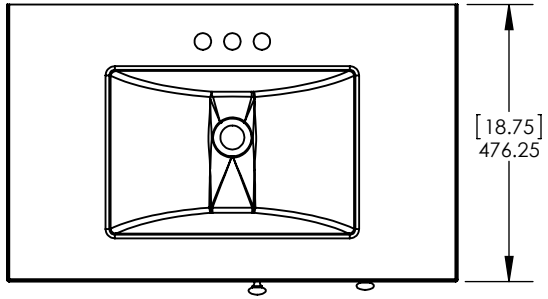

Top View / Vista Superior

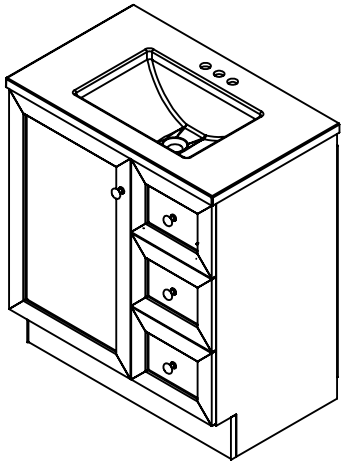

Isometric View / Vista Isometrica

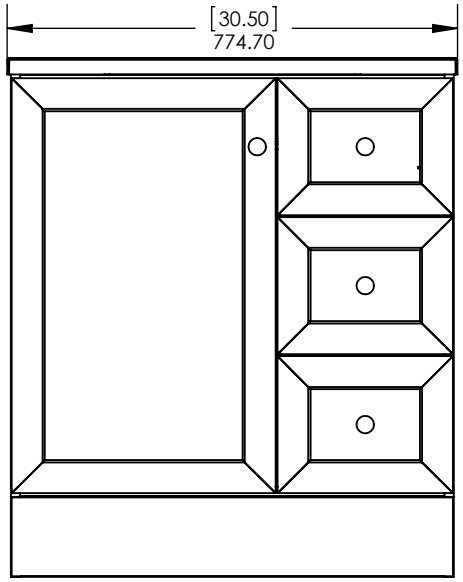

Front View / Vista Frontal

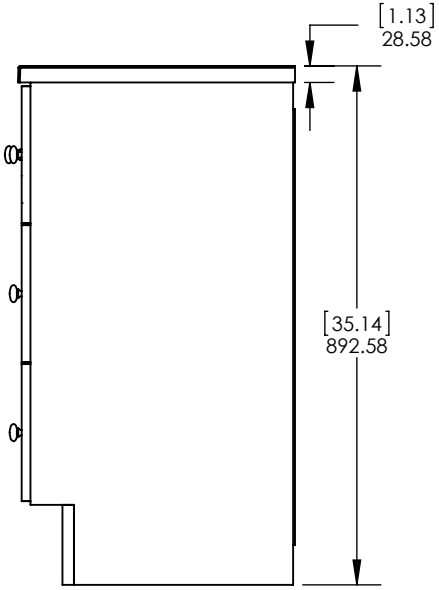

Side View / Vista Lateral

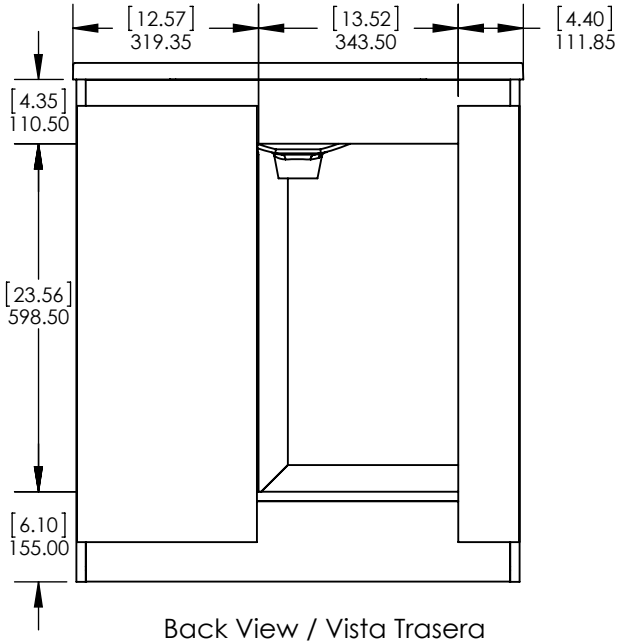

Back View / Vista Trasera

DWR		
REV	ING	
APR	R&D	

ITEM: **W062930P2**

REV **A**

NAME: Bannister 30in 2Pc

MATERIAL: ----

ONLY FOR REFERENCE

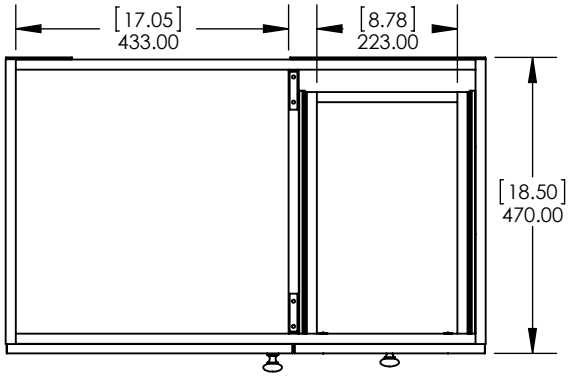

Top View / Vista Superior

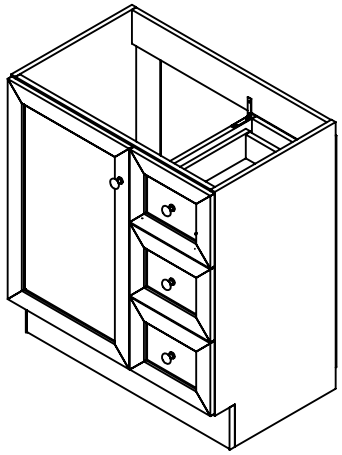

Isometric View / Vista Isometrica

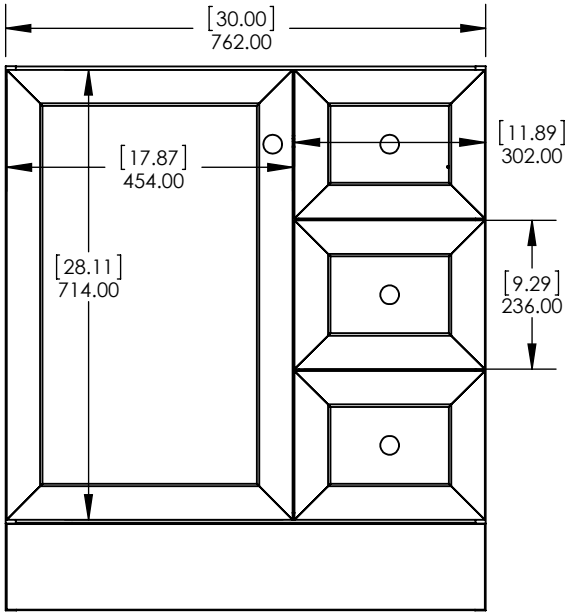

Front View / Vista Frontal

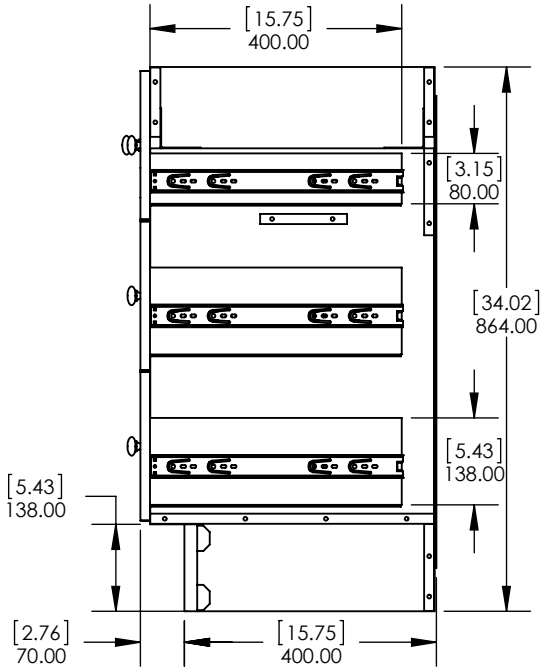

Side View / Vista Lateral

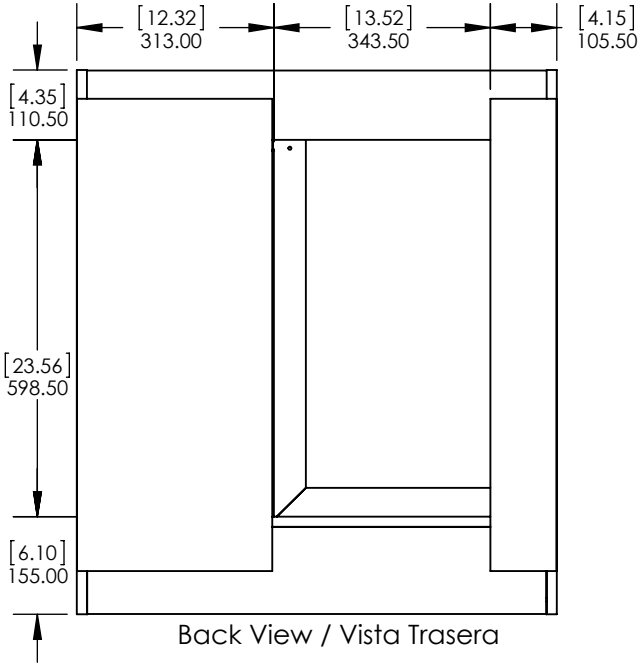

Back View / Vista Trasera

DWR		
REV	ING	
APR	R&D	

ITEM: **W062930P2**

REV **A**

NAME: Bannister 30in 2Pc

MATERIAL: ----

ITEM TYPE	ITEM ID	ITEM DESCRIPTION	DRAWING STATUS
FG	595764	VTOP 2Tone 30.5x18.75in Rect. Color Point White 4in No/BS	R&D

REV	DESCRIPTION	DATE	APPROVAL
0	RELEASED	05/09/23	E. SANDOVAL

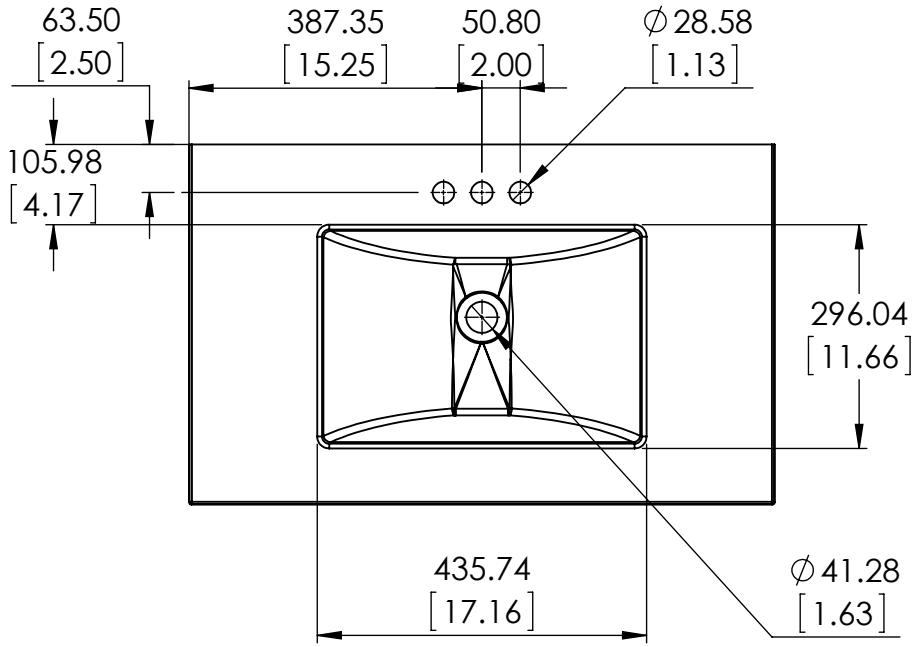

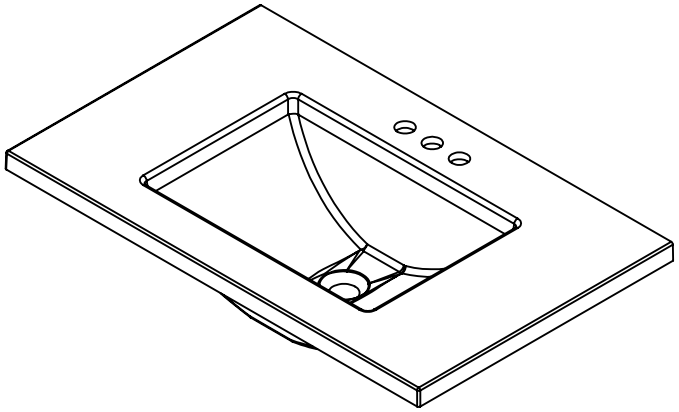

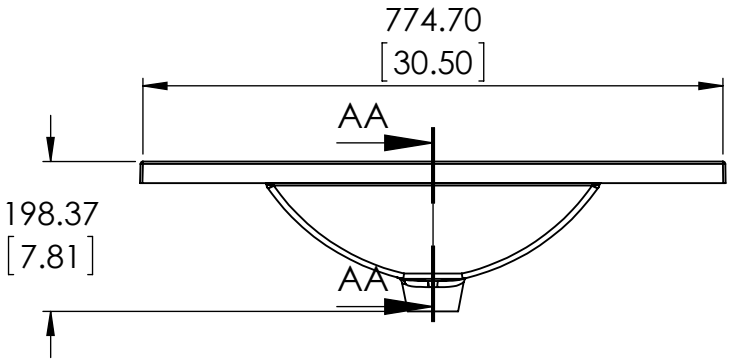

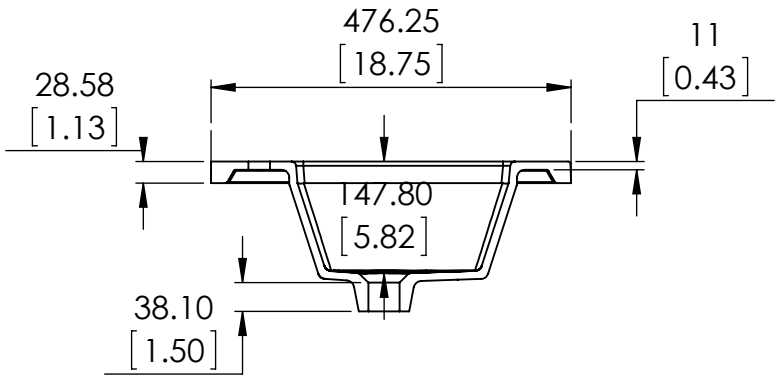

PROPRIETARY AND CONFIDENTIAL

THE INFORMATION CONTAINED IN THIS DRAWING IS THE SOLE PROPERTY OF WOODCRAFTERS. ANY REPRODUCTION IN PART OR AS A WHOLE WITHOUT THE WRITTEN PERMISSION OF WOODCRAFTERS IS PROHIBITED.

UNLESS OTHERWISE SPECIFIED

DIMENSIONS ARE IN MM. AND [INCHES]

TOLERANCES ARE + 3.175 [.125] - 3.175 [0.125]

SCALE:1:10

	NAME	DATE
DRAWN	G. REYES	4/11/23
CHECKED	O. RAZO	4/11/23
ENG APPR.	J. GUZMAN	4/11/23
MFG APPR.	V. SANCHEZ	4/11/23

SIZE A | DWG. NO. FG | SHEET 1 OF 1