Email: service@t-motorsports.com

Installation Manual

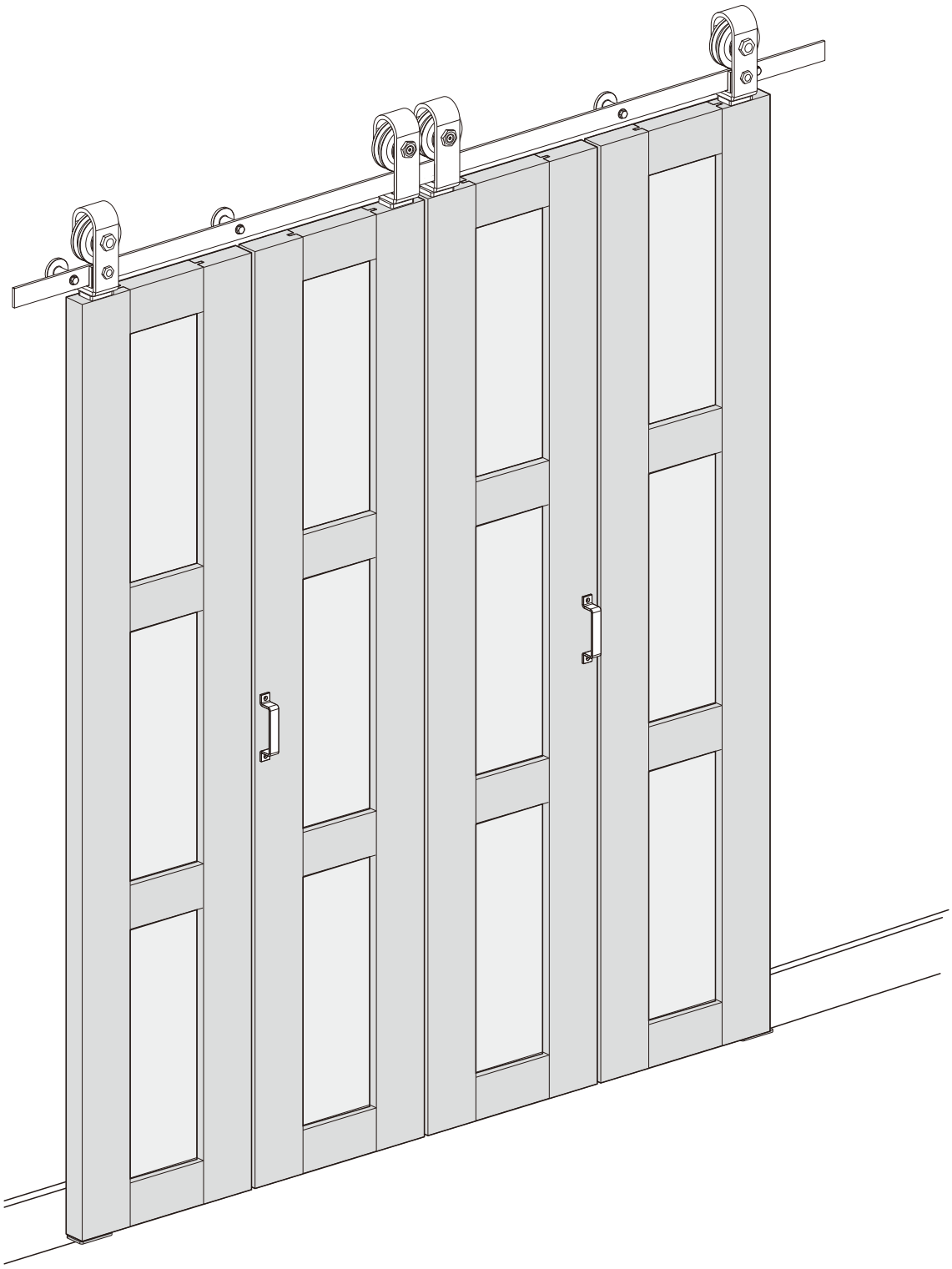

Components list

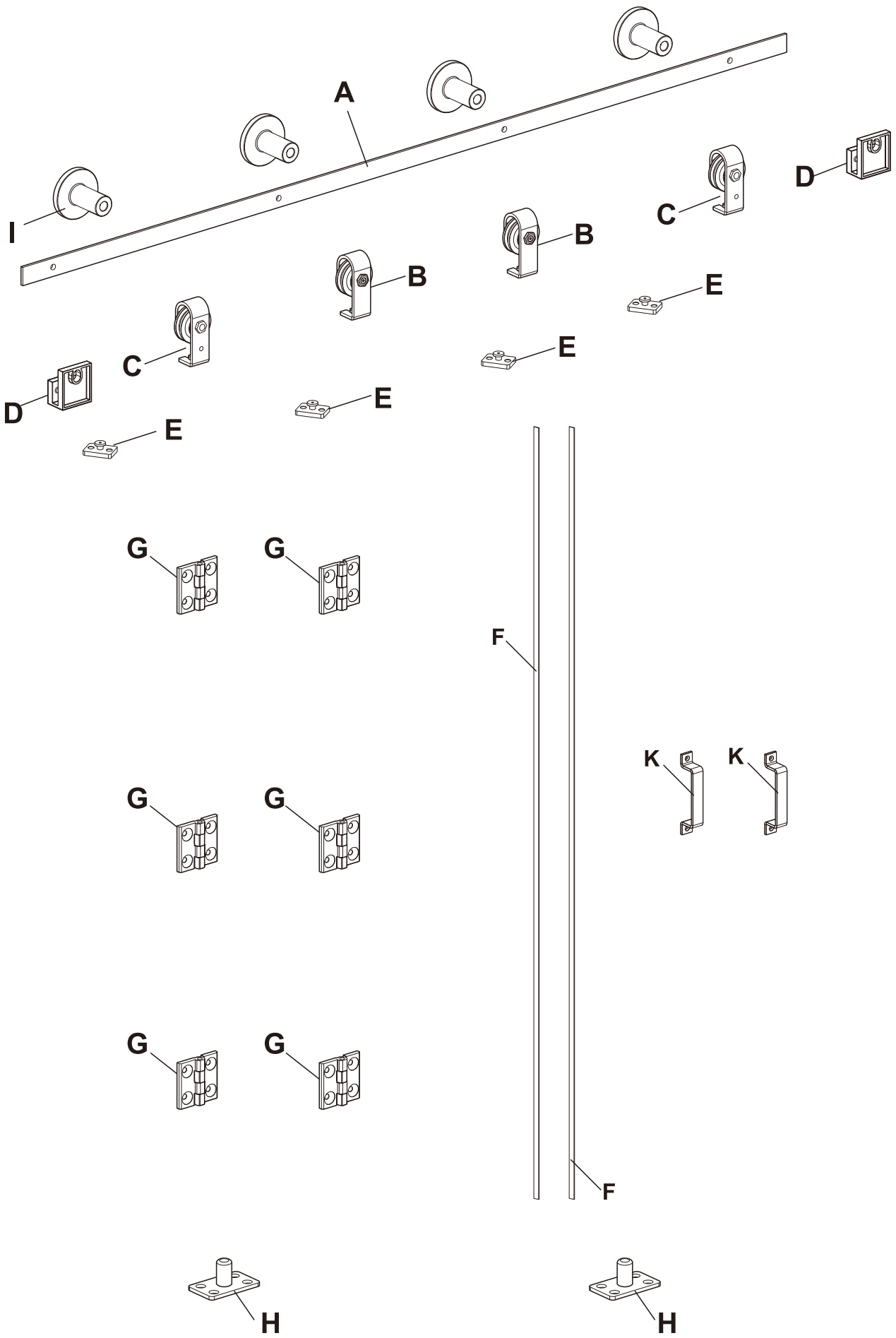

Pre-installation

TOOLS REQUIRED

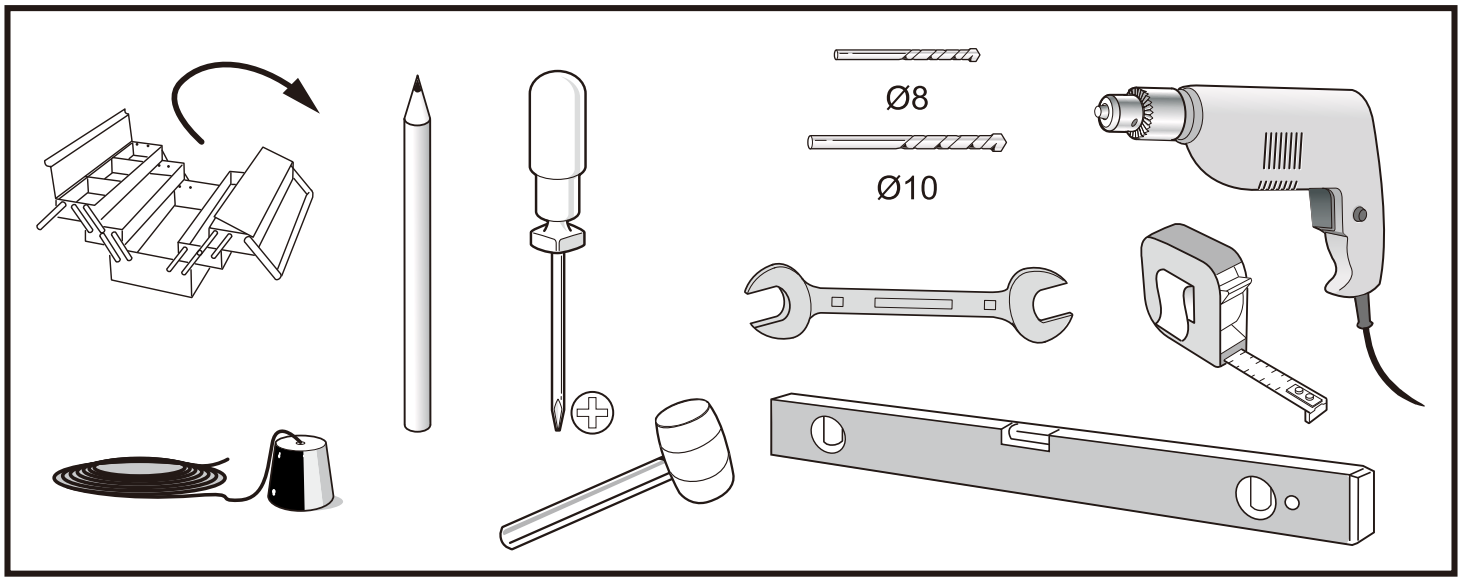

HARDWARE INCLUDED

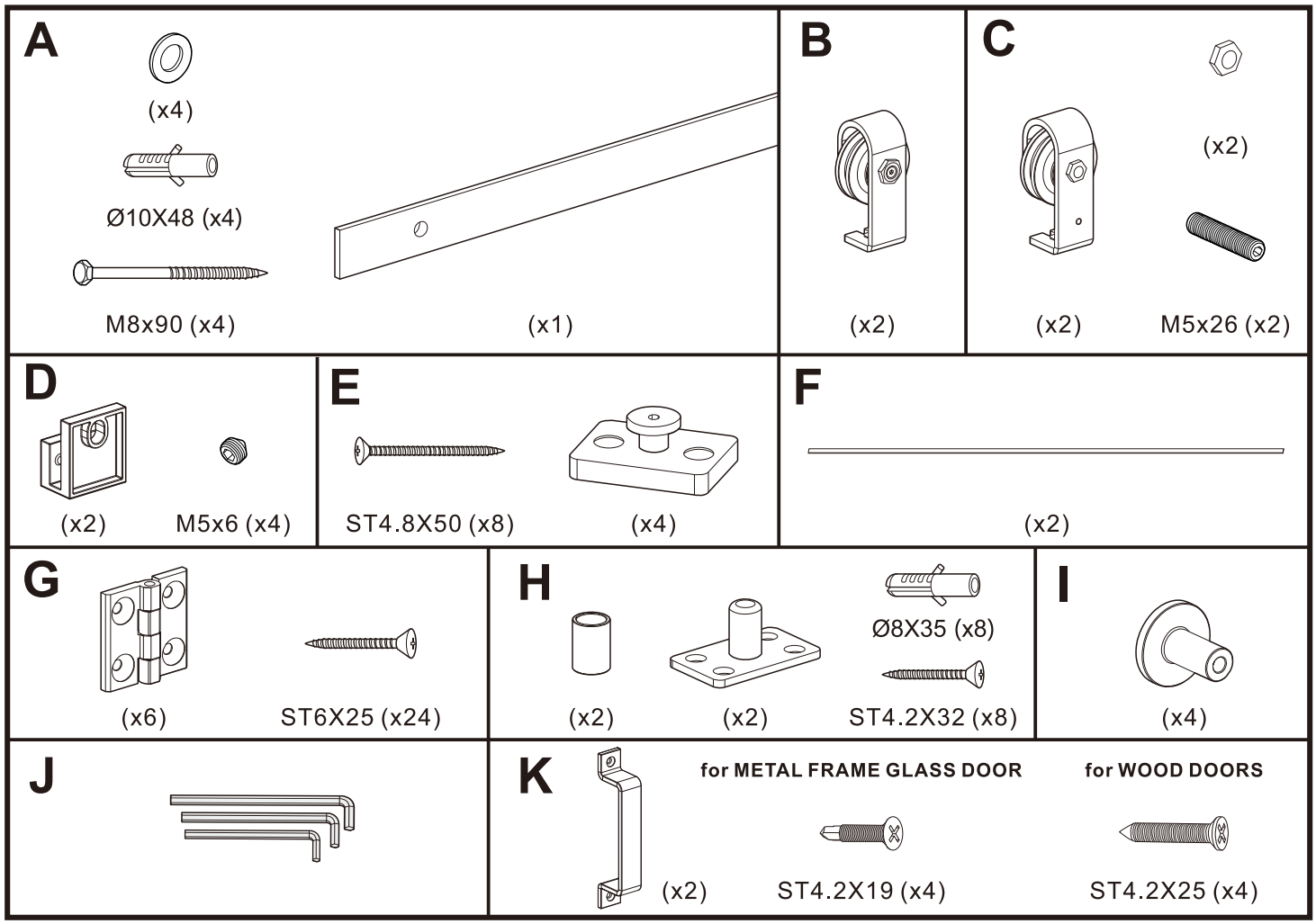

Installation

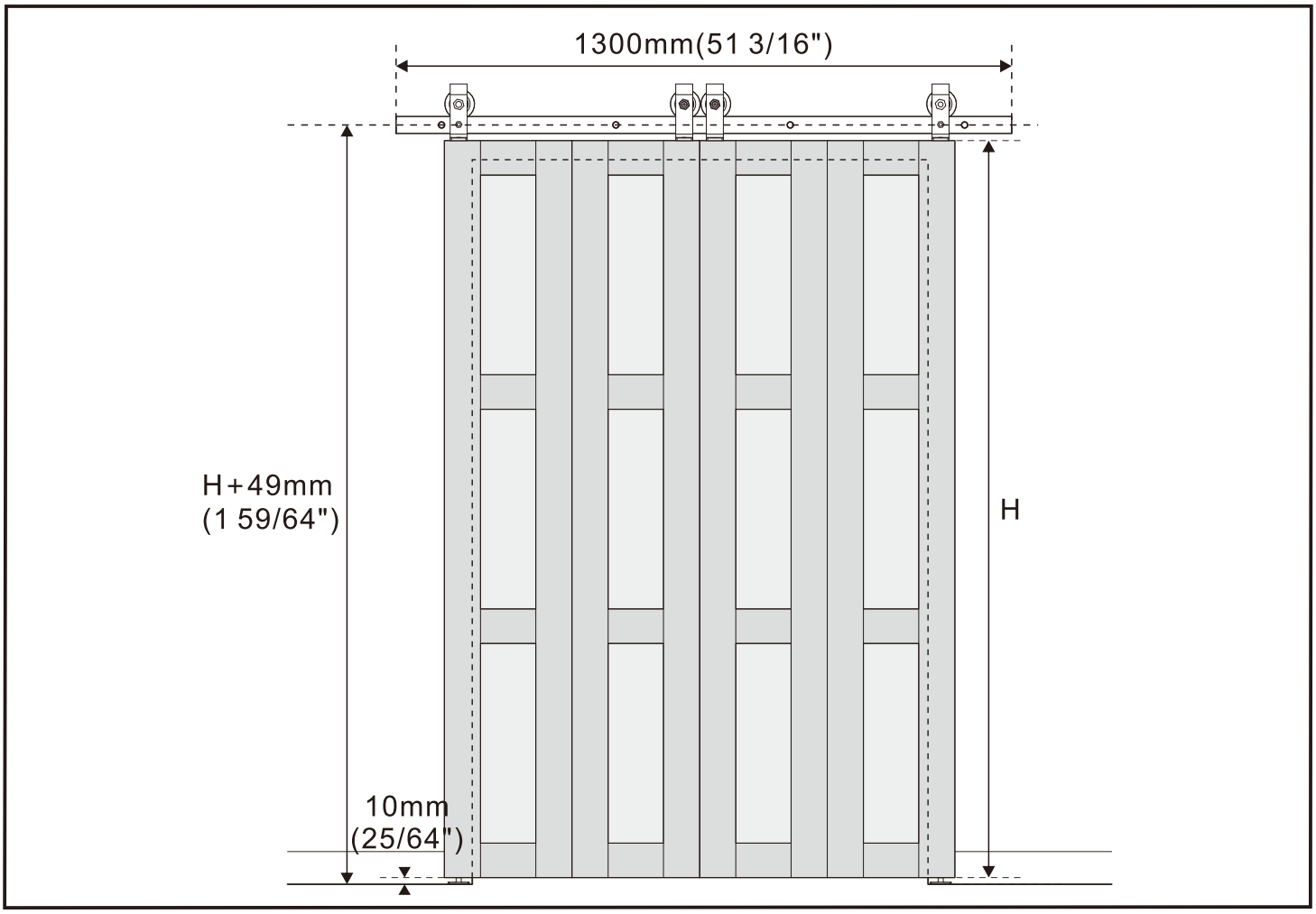

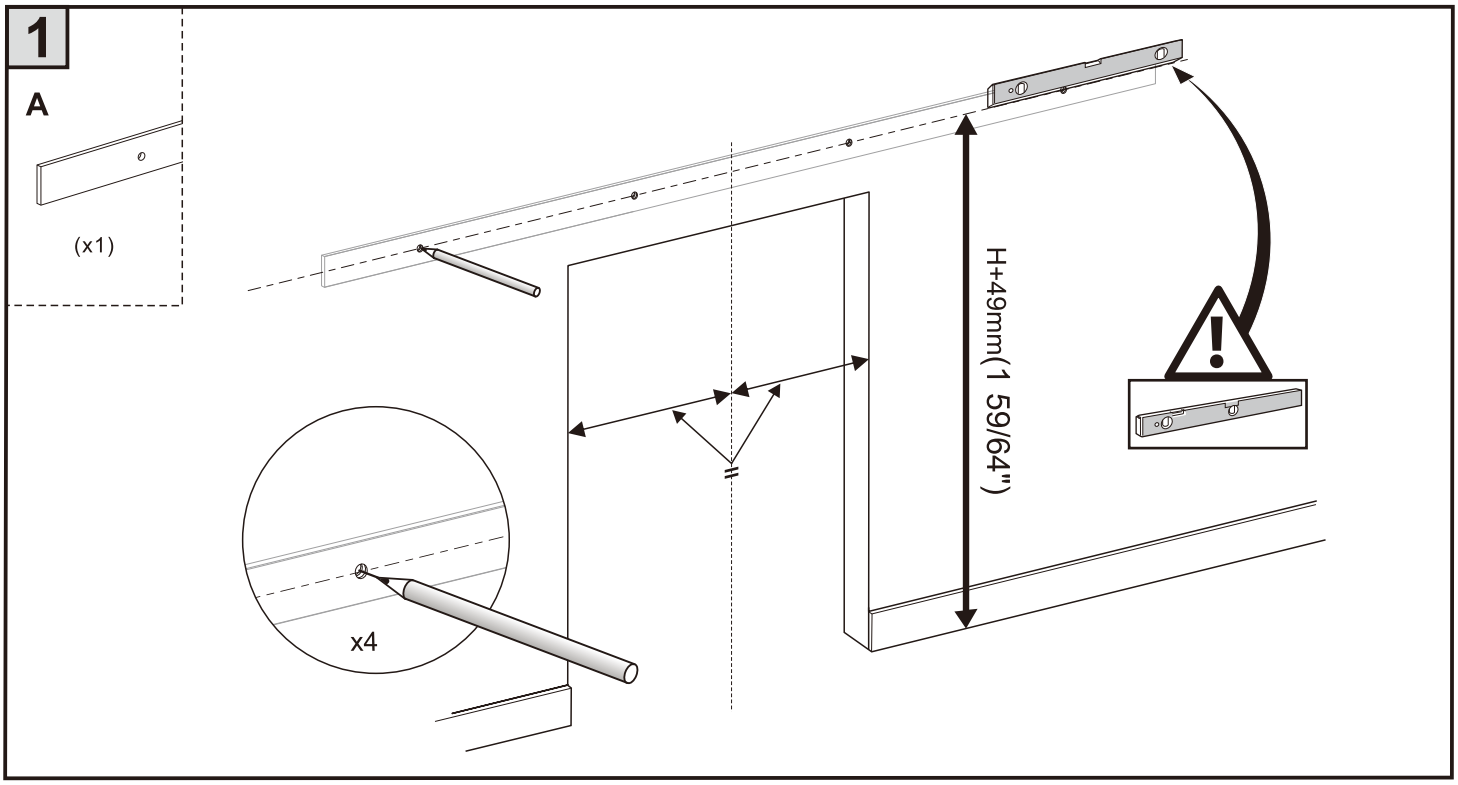

2

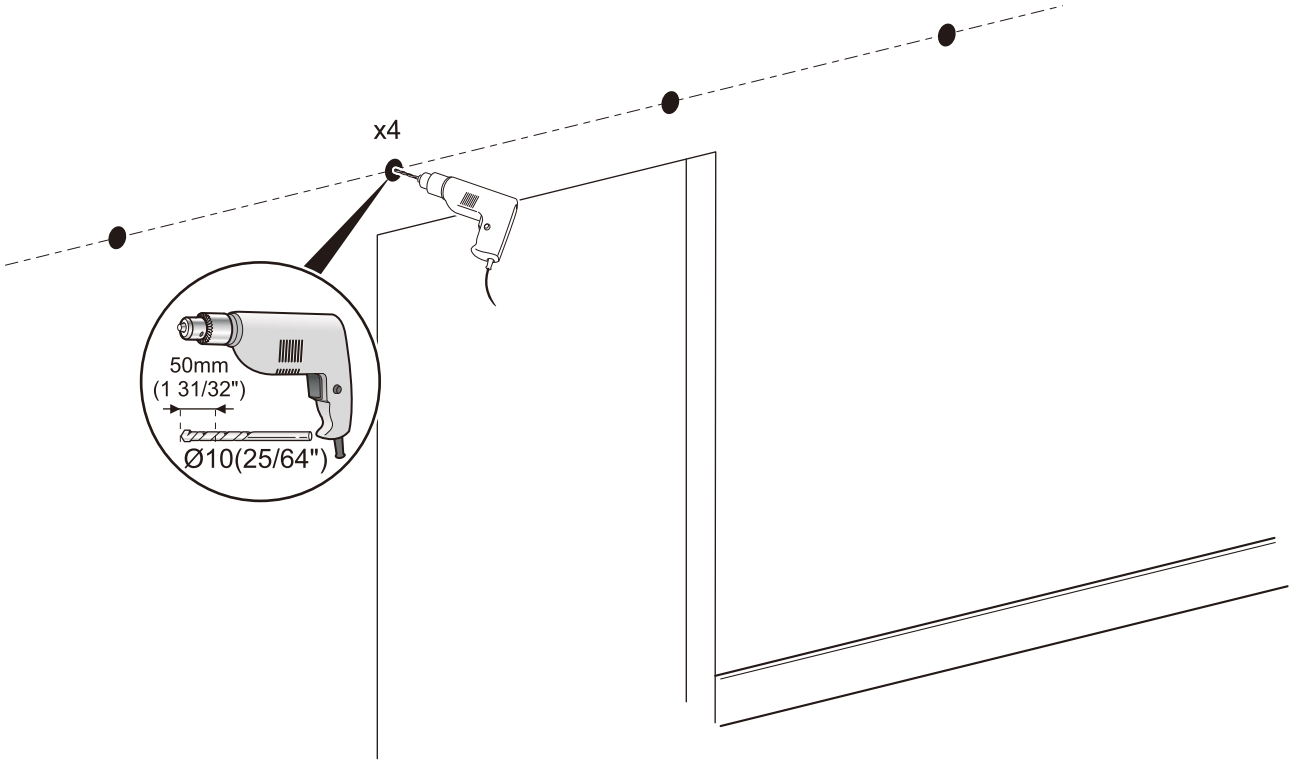

3

A

(x4)

Ø10X48 (x4)

M8x90 (x4)

I

(x4)

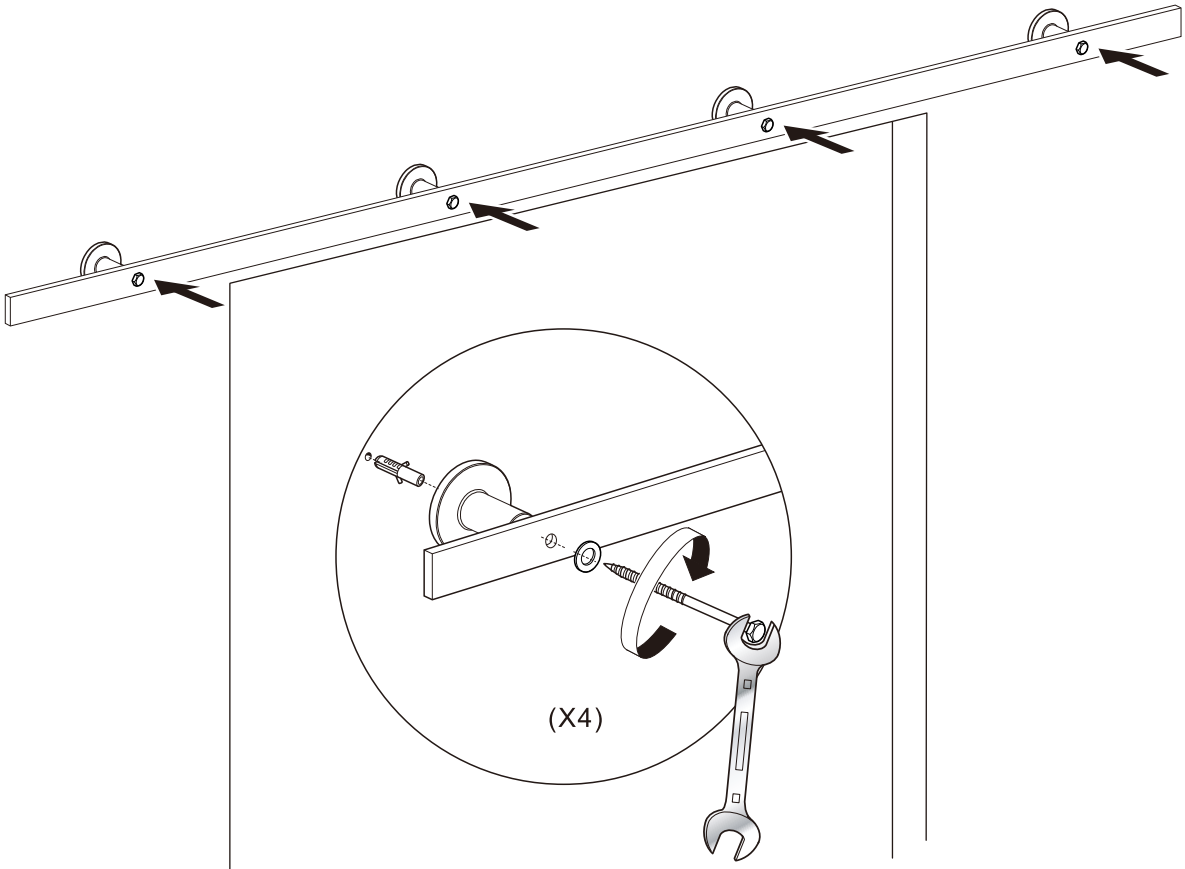

4

G

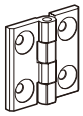

(x6)

ST6X25 (x24)

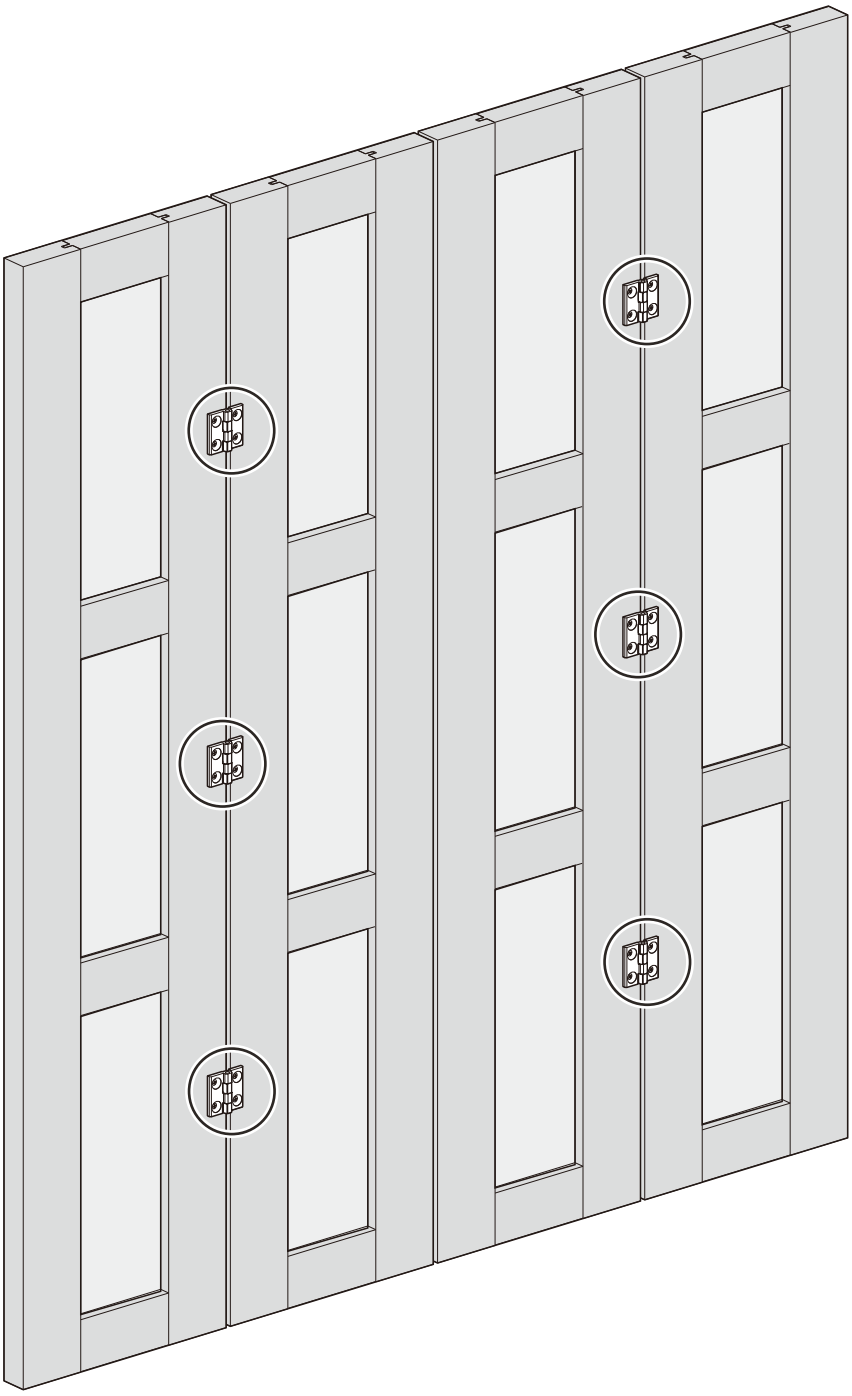

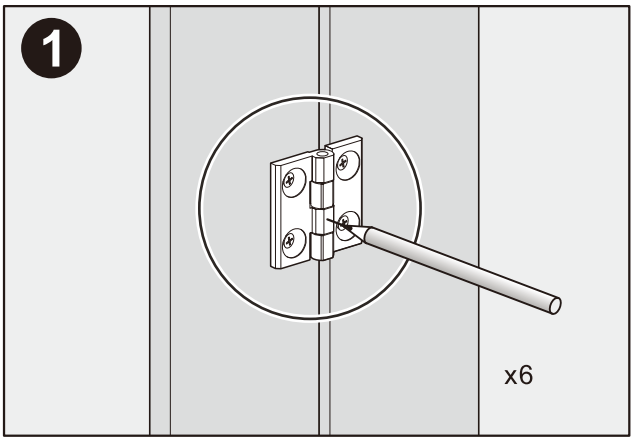

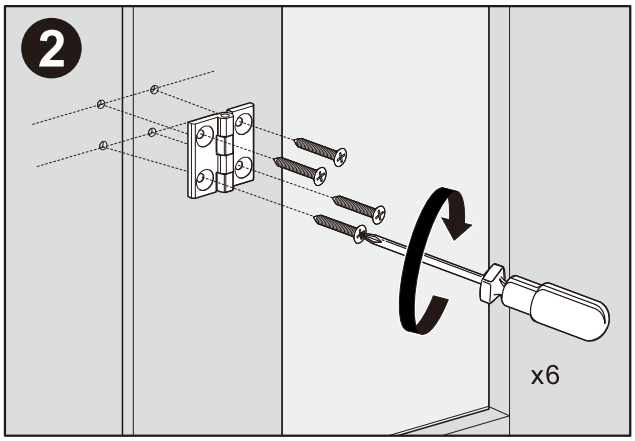

5

E

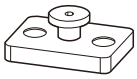

(x4)

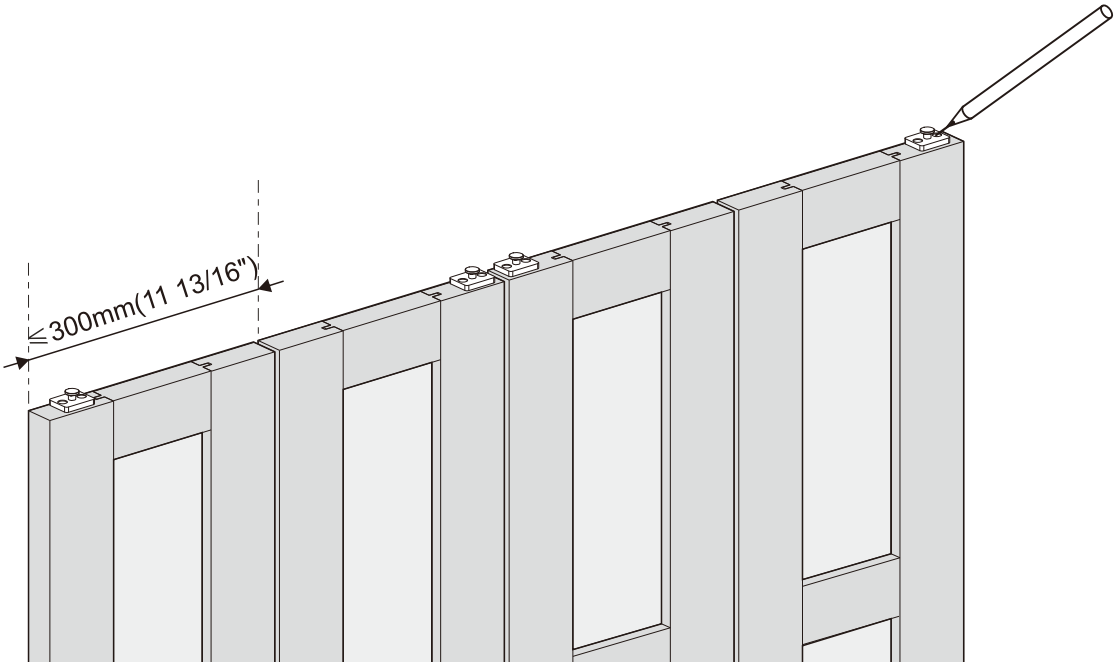

6

E

ST4.8X50 (x8)

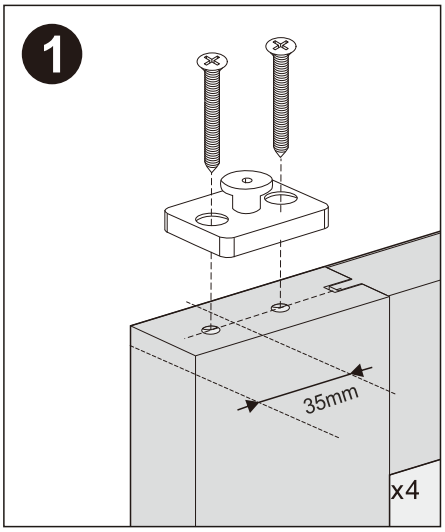

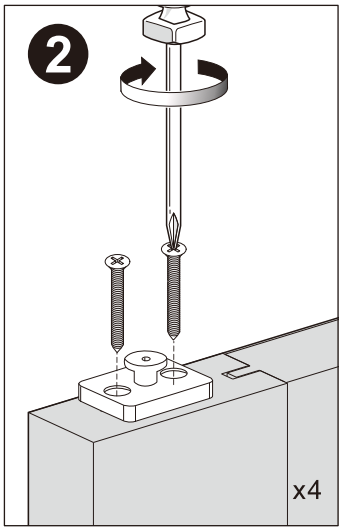

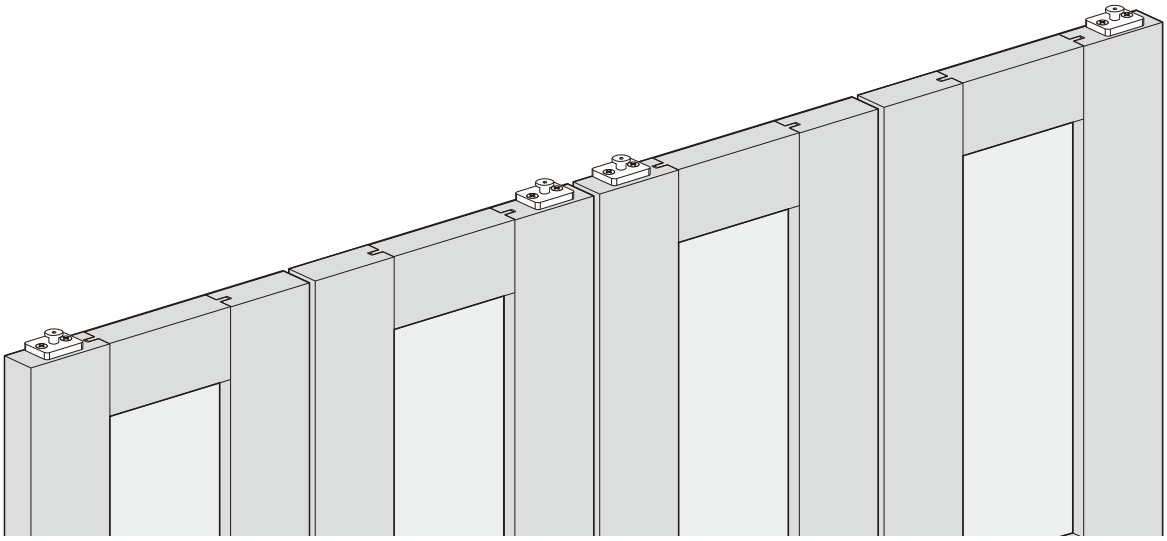

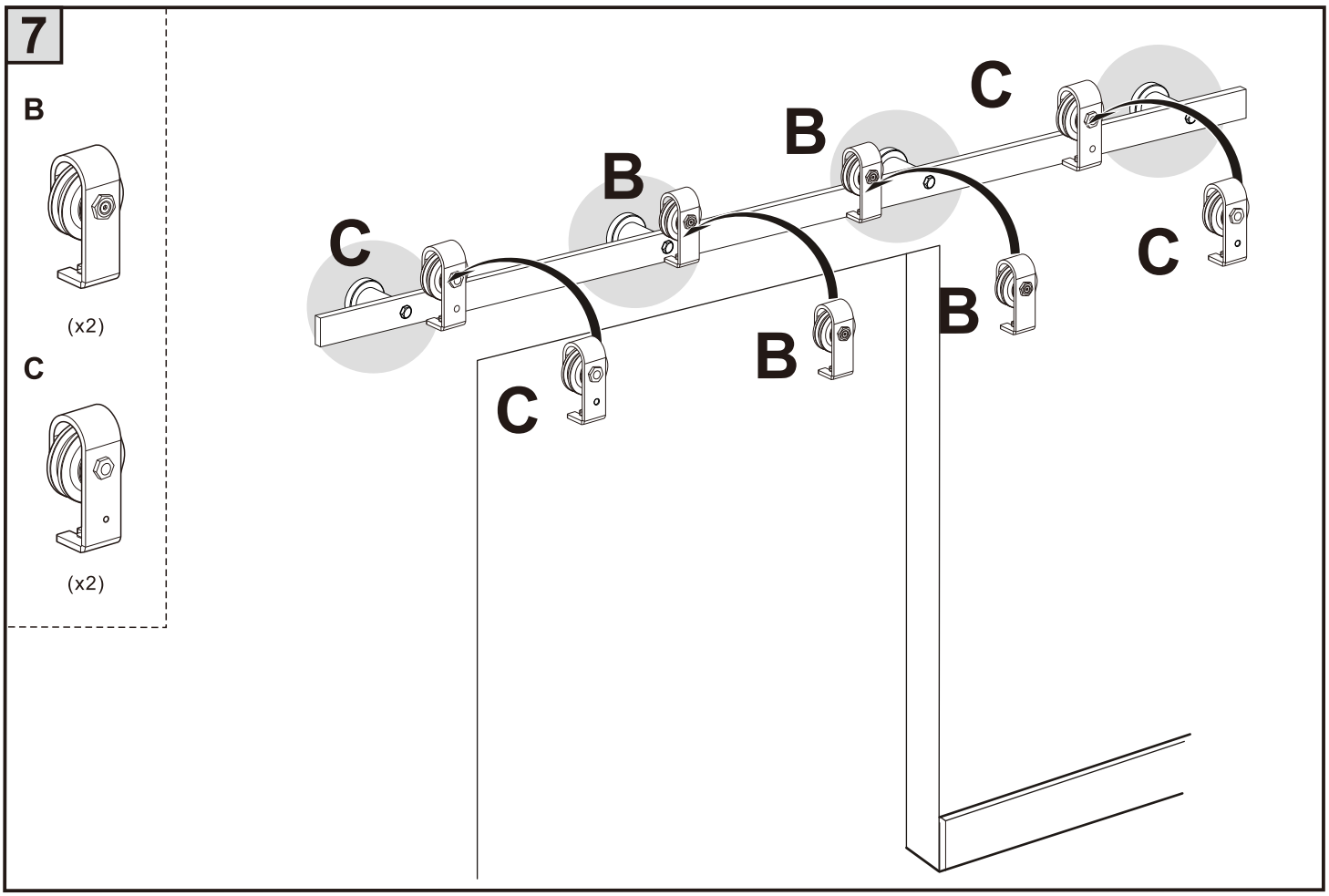
7
B
(x2)
C
(x2)
C
B
B
C
B
B
C
C

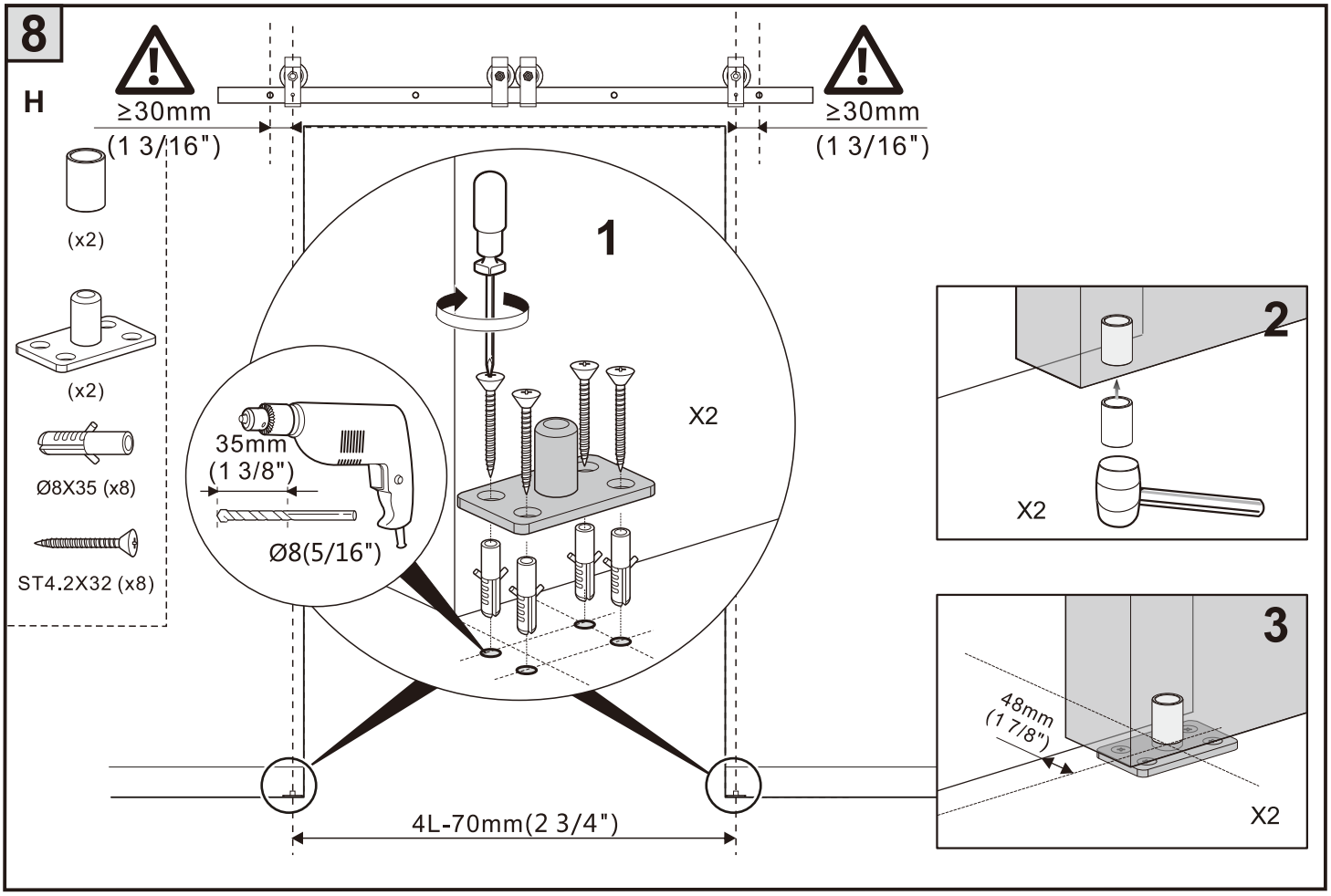
8
H
(x2)
(x2)
Ø8X35 (x8)
ST4.2X32 (x8)
≥30mm
(1 3/16")
≥30mm
(1 3/16")
1
X2
35mm
(1 3/8")
Ø8(5/16")
4L-70mm(2 3/4")
2
X2
3
48mm
(1 7/8")
X2

9

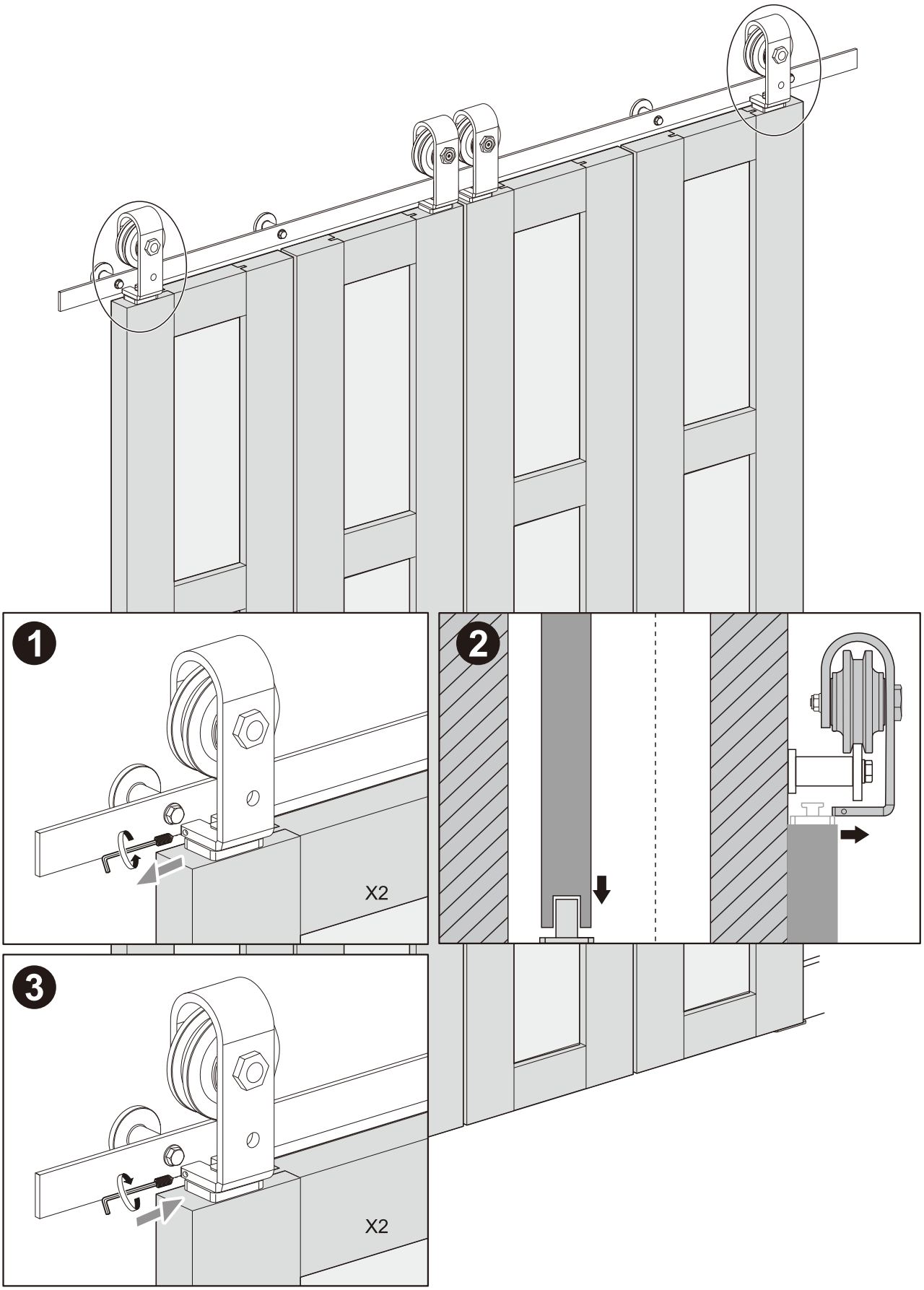

10

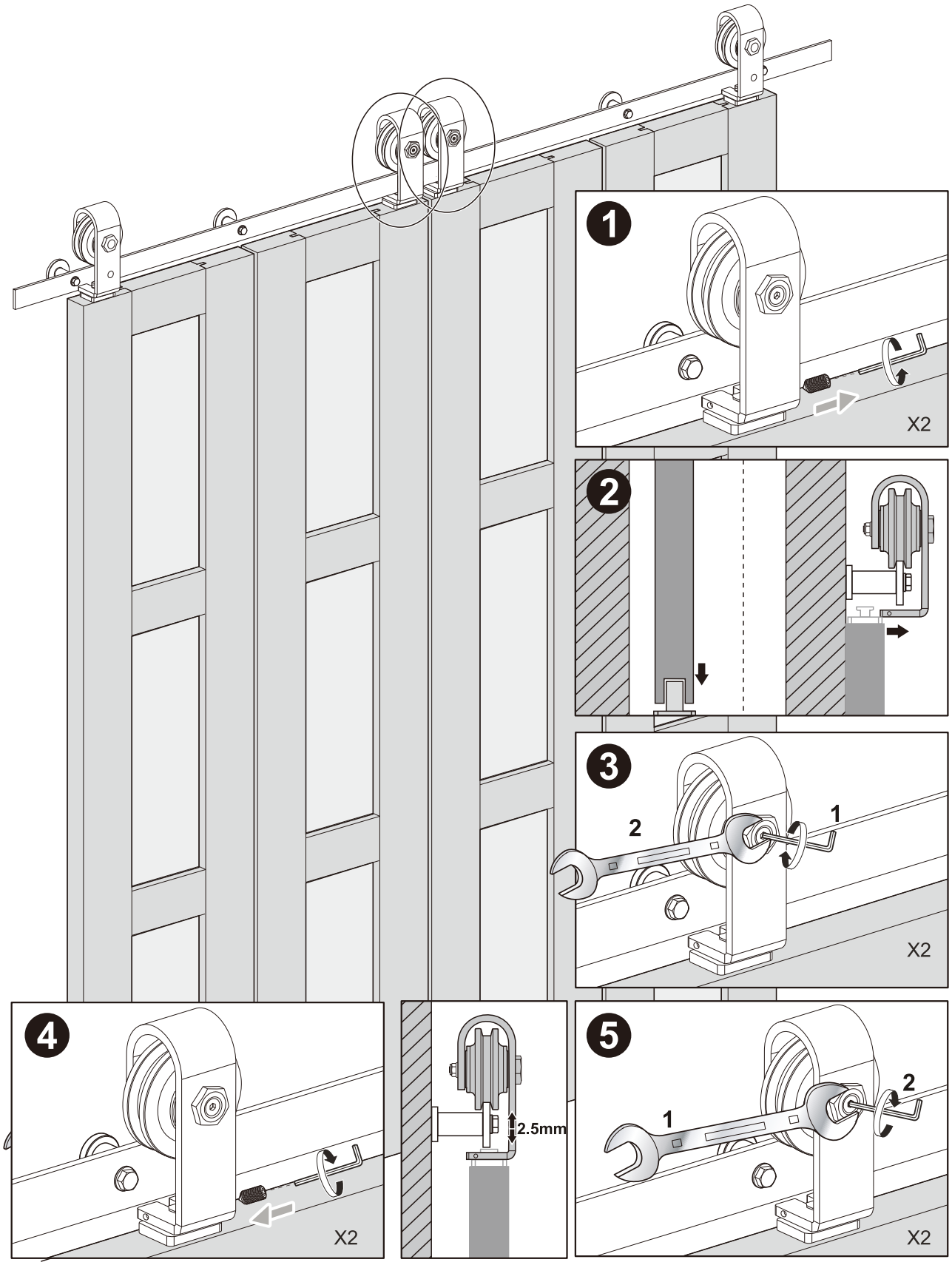

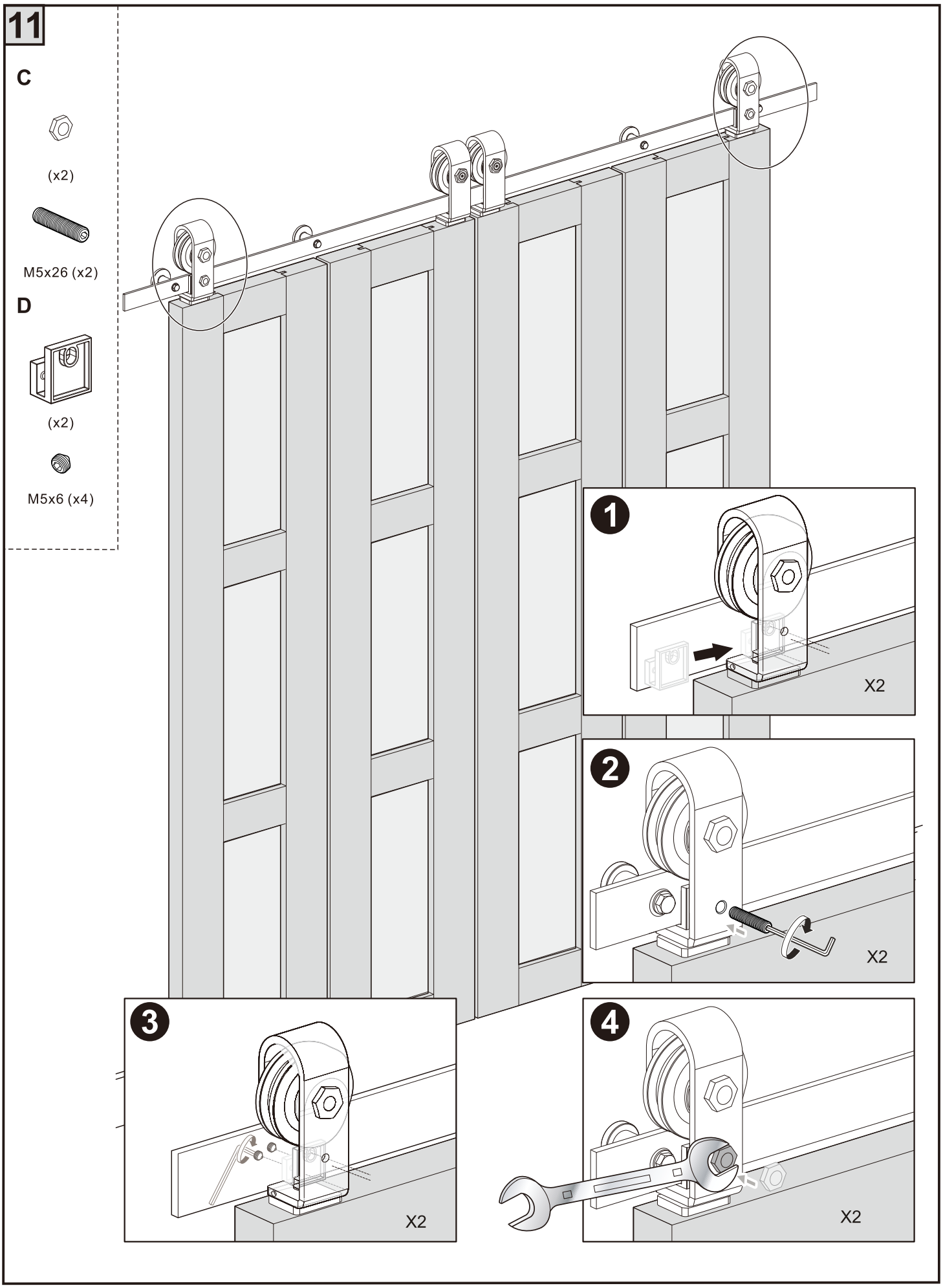
11
C
(x2)
M5x26 (x2)
D
(x2)
M5x6 (x4)
1
X2
2
X2
3
X2
4
X2

12

F

(x2)

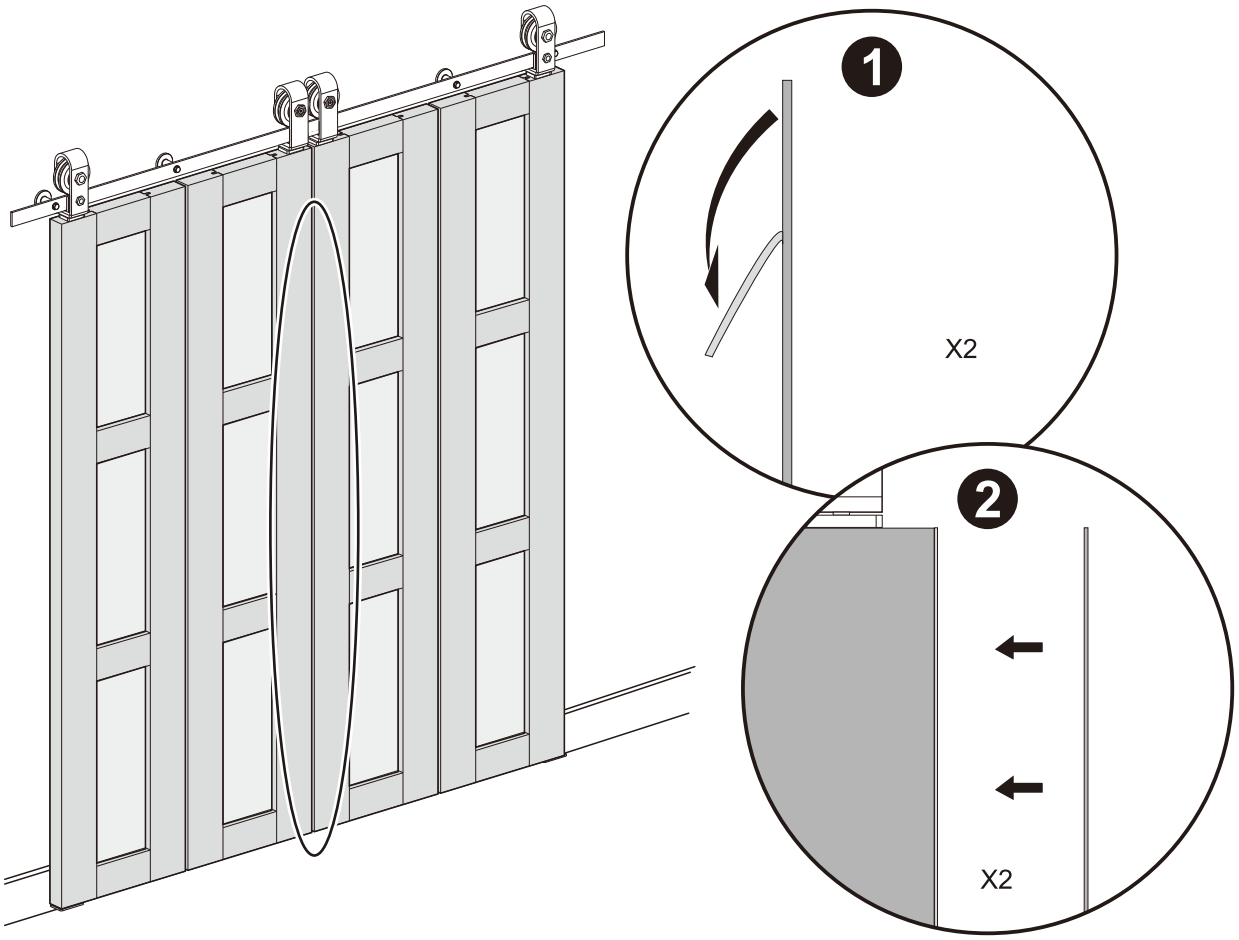

13

K

(x2)

for WOOD DOORS

ST4.2X25 (x4)

for METAL FRAME GLASS DOOR
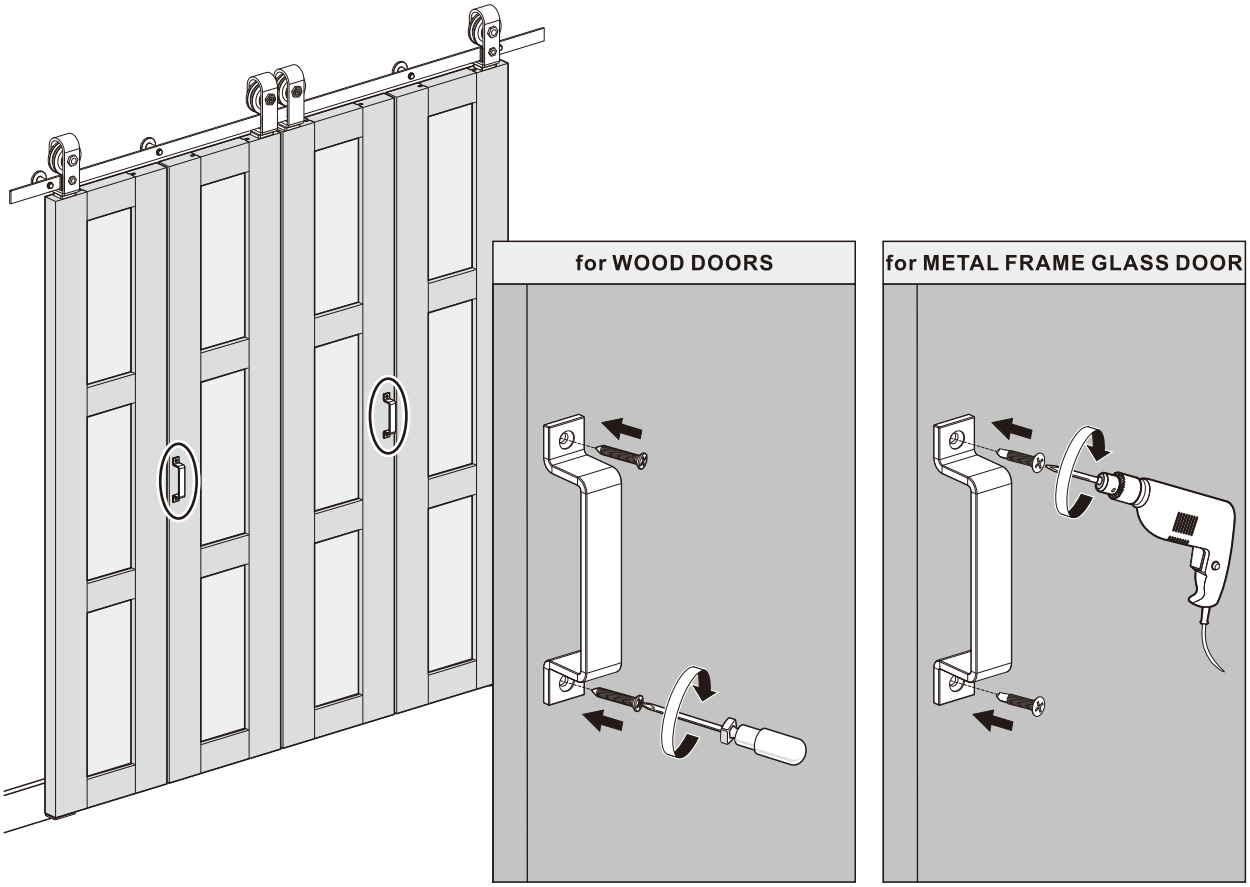
ST4.2X19 (x4)