24" Pocket Handle Dishwasher

500 Series – Stainless Steel SHP65DM5N



SHP65DM5N
Stainless Steel

Also available in:

White	SHP65DM2N
Black	SHP65DM6N

Zone Wash creates an intensive wash focus area, allowing you to wash your challenging dishes and pots with confidence

Features & Benefits

The AutoAir® drying option automatically releases the door at the end of the cycle to let moisture escape and fresh air in for drier dishes.

So quiet at 44 dBA, InfoLight® shines on the floor so you know the dishwasher is running.

Enhance your cleaning experience with Wi-Fi enabled Home Connect®. Access additional wash cycles and options or choose the right one for your needs using Smart Cycle.

General Properties	
Wash cycles (control panel)	5 (Deep Clean, Auto, Normal, Speed60 (1hr Wash), Favorite)
Additional wash cycles (in Home Connect®)	4 (Heavy, Delicate, Rinse, MachineCare)
Options (control panel)	3 (Sanitize, Remote Start, AutoAir®)
Additional options (in Home Connect®)	3 (Half Load, Eco, Zone Wash)
dBA	44
Wash system	Zone Wash
Drying system	AutoAir®
Third rack	Standard 3rd Rack
Rack adjustability	Rackmatic®
Tub material	Stainless Steel
Control type	Touch Controls
Concealed water heating element	Yes
Leak protection system	24/7 AquaStop®
Home Connect® (Wi-Fi enabled)	Yes
NSF®-certified** sanitize option	Yes
Water softener	No
Five-level wash	Yes
Child Lock button suspension	No
Anti-Fingerprint Finish	Yes
Special features	InfoLight®, AutoAir® Option, Zone Wash
Efficiency	
Water usage per cycle	3.2 gal
ENERGY STAR® Certified	Yes
Total annual energy consumption	240 kWh

Capacity	
Number of place settings	16
Technical Details	
Watts	1440 W
Current	12 Amps
Volts	120 V
Frequency	60 Hz
Power cord full length	67"
Power cord install length from edge of unit when facing the door	Left – 45" Right – 56"
Minimum water pressure	14 lb/sin
Length outlet hose	78 3/4"
Dimensions & Weight	
Overall appliance dimensions (HxWxD)	33 7/8" x 23 9/16" x 23 3/4"
Required cutout size (HxWxD)	33 7/8" x 24" x 24"
Adjustable feet	Yes
Net weight	85 lbs
Accessories—Optional	
Junction Box	SMZPCJB1UC
Junction Box + Supply Hose Kit	SMZ3IN1UC
Bosch Dishwasher Water Supply Hose	SMZSH1ABUC
Drain Hose Extension Kit	SGZ1010UC
Silverware Basket	SMZ4000UC
Dishwasher Accessory Kit	SMZ5000
Anti-Tarnish Silverware Cassette	SMZ5002UC
Edge Protector + Power Cord Clip Install Kit	SMZEPCC1UC

Home Connect

*Compared to a Bosch dishwasher with 2 racks.
**Certification to NSF/ANSI Standard 184 for residential dishwashers.

Accessories: To purchase Bosch accessories, cleaners & parts please visit www.bosch-home.com/us/store or call 1-800-944-2904 (Mon to Fri 5 am to 6 pm PST, Sat 6 am to 3 pm PST).

Notes: All height, width and depth dimensions are shown in inches. BSH reserves the absolute and unrestricted right to change product materials and specifications, at any time, without notice. Consult the product's installation instructions for final dimensional data and other details prior to making cutout.

Warranties: Please see Use & Care manual or Bosch website for statement of limited warranty.

For more information on our entire line of products, go to www.bosch-home.com/us or call 1-800-944-2904

© BSH Home Appliances Corporation. All rights reserved. Bosch is a registered trademark of Robert Bosch GmbH.

24" Pocket Handle Dishwasher

500 Series – Stainless Steel SHP65DM5N

Installation Details

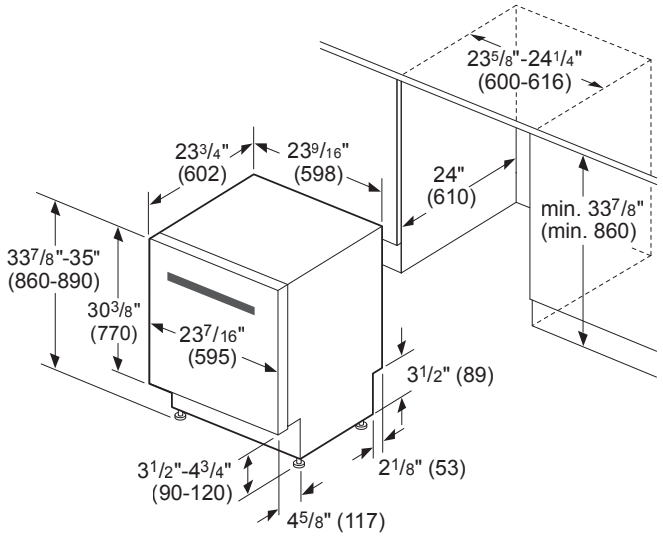

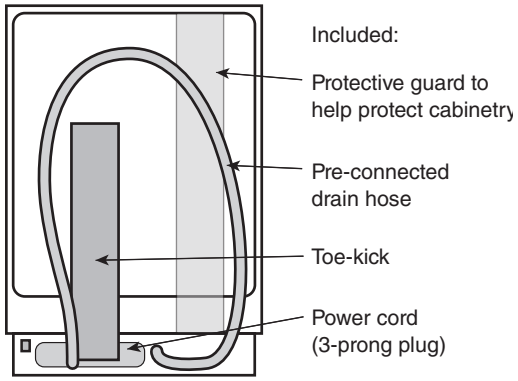

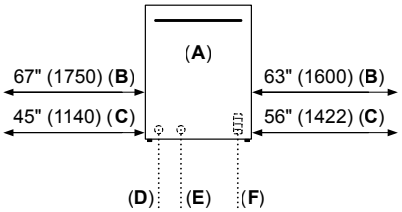

A: Front view
B: Drain hose
C: Electrical Power Cord: length shown according to Installation Instructions
D: Inlet
E: Drain
F: Electrical

All connections are at the rear of the appliance.
Extension for drain hose available as accessory.
Junction Box for hard wired connection available as an accessory.

Measurements in inches (mm)

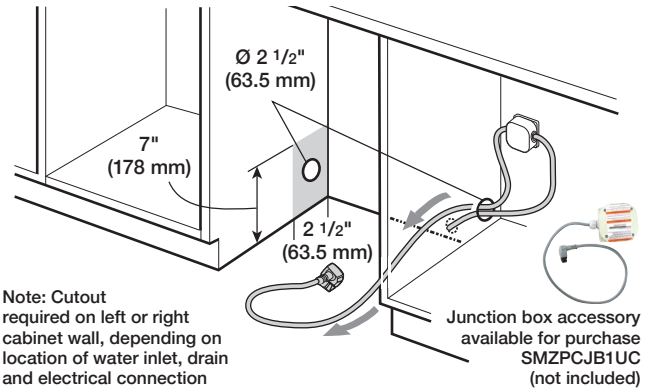

Example of Hardwire Installation

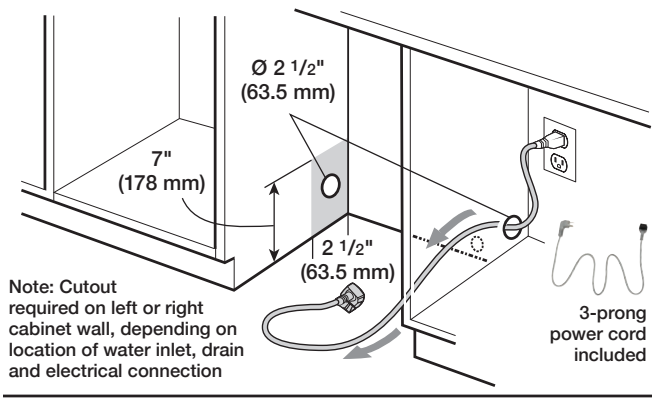

Example of an Electrical Receptacle Installation

Accessories: To purchase Bosch accessories, cleaners & parts please visit www.bosch-home.com/us/store or call 1-800-944-2904 (Mon to Fri 5 am to 6 pm PST, Sat 6 am to 3 pm PST).

Notes: All height, width and depth dimensions are shown in inches. BSH reserves the absolute and unrestricted right to change product materials and specifications, at any time, without notice. Consult the product's installation instructions for final dimensional data and other details prior to making cutout.

Warranties: Please see Use & Care manual or Bosch website for statement of limited warranty.

For more information on our entire line of products, go to www.bosch-home.com/us or call 1-800-944-2904

© BSH Home Appliances Corporation. All rights reserved. Bosch is a registered trademark of Robert Bosch GmbH.

24" Pocket Handle Dishwasher

500 Series – Stainless Steel SHP65DM5N

Installation Details

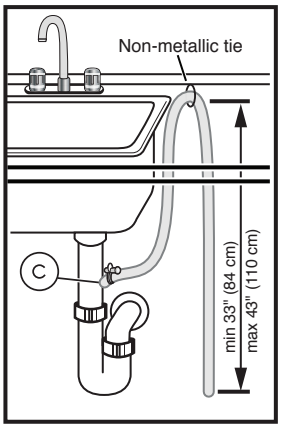

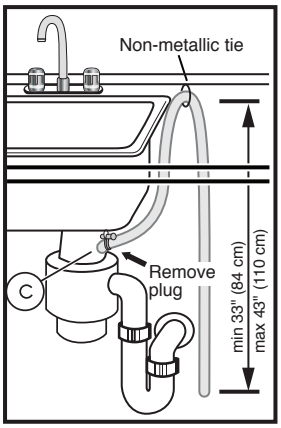

Note: Plumbing installations will vary - refer to local codes. Drain hose included is 79" (201 cm) and can be extended to a maximum of 155 3/4" (396 cm).

Always use the approved drain hose extension kit (SGZ1010UC).

Ensure a portion of the drain hose is raised between min. 33" (84 cm) and max. 43" (110 cm) above the cabinet floor.

Accessories: To purchase Bosch accessories, cleaners & parts please visit www.bosch-home.com/us/store or call 1-800-944-2904 (Mon to Fri 5 am to 6 pm PST, Sat 6 am to 3 pm PST).

Notes: All height, width and depth dimensions are shown in inches. BSH reserves the absolute and unrestricted right to change product materials and specifications, at any time, without notice. Consult the product's installation instructions for final dimensional data and other details prior to making cutout.

Warranties: Please see Use & Care manual or Bosch website for statement of limited warranty.

For more information on our entire line of products, go to www.bosch-home.com/us or call 1-800-944-2904

© BSH Home Appliances Corporation. All rights reserved. Bosch is a registered trademark of Robert Bosch GmbH.