HDX 5-Tier Shelf
Components and Assembly Instructions

WARNING

- Unit must be placed on a level surface or leveled for use.
- Do not sit or stand on or allow anyone to climb, sit or stand on the assembled product.
- Mount the unit to the wall for tip over prevention, as unit can tip over causing severe injury or death.
- Mount the unit to the wall for max weight capacity, do not exceed claimed weight capacity.
- Distribute weight evenly on each shelf and keep heavier loads on the bottom.
- Do not exceed recommended shelf spacing, stated on shelf label, by connecting poles.

CUSTOMER SERVICE/PARTS
If replacement parts or customer service is needed, please contact customer service by scanning the QR Code with your SmartPhone or by visiting requestpart.com.

COMPONENTS

Threaded feet x8



Foot collars x8



Top cap x8



Wall brackets x2



Tall pole x16

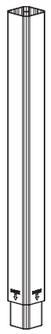

Short pole x4

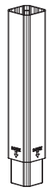

Interlocking Tees x4



#10 Screws x4



Drywall Anchors x4



Shelves x5

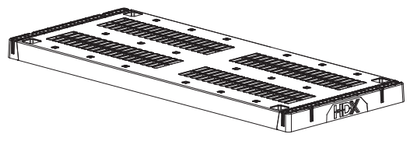

ASSEMBLY INSTRUCTIONS

STEP 1
Flip the first shelf over, then assemble four threaded feet with foot collars and insert into the bottom shelf.

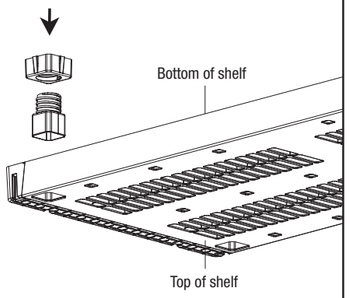

STEP 2
Flip the shelf over, so feet are touching the ground.

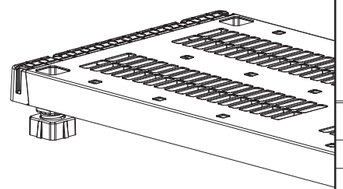

STEP 3
Insert tapered end of pole into top of shelf. Use either 4 short or 4 tall poles based on desired shelf height.

Short: 9 inches between shelves
Tall: 15.4 inches between shelves.

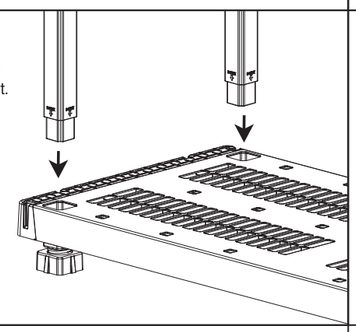

STEP 4
Line up the next shelf with the inserted poles and press firmly down until fully engaged. Repeat steps 3 & 4 to get to desired shelf height.

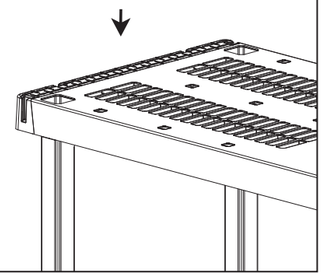

STEP 5
Insert top caps fully into place on the top shelf.

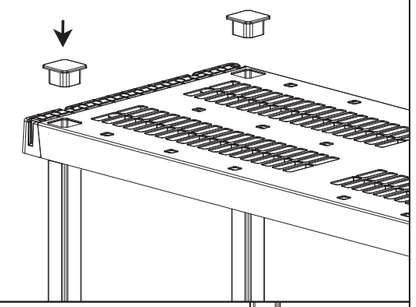

STEP 6
Move shelf into final location. Twist foot collars up or down to level shelf, if necessary.

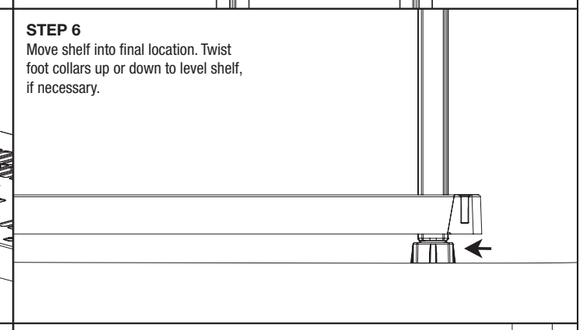

STEP 7
Secure wall brackets around poles under the desired top shelf. Secure wall brackets into stud or using wall anchors.

Warning Wall Brackets must be used for full shelf weight capacity.

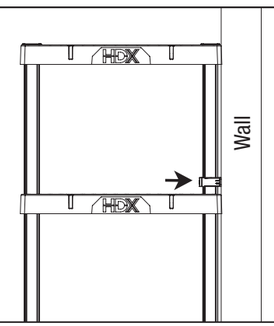

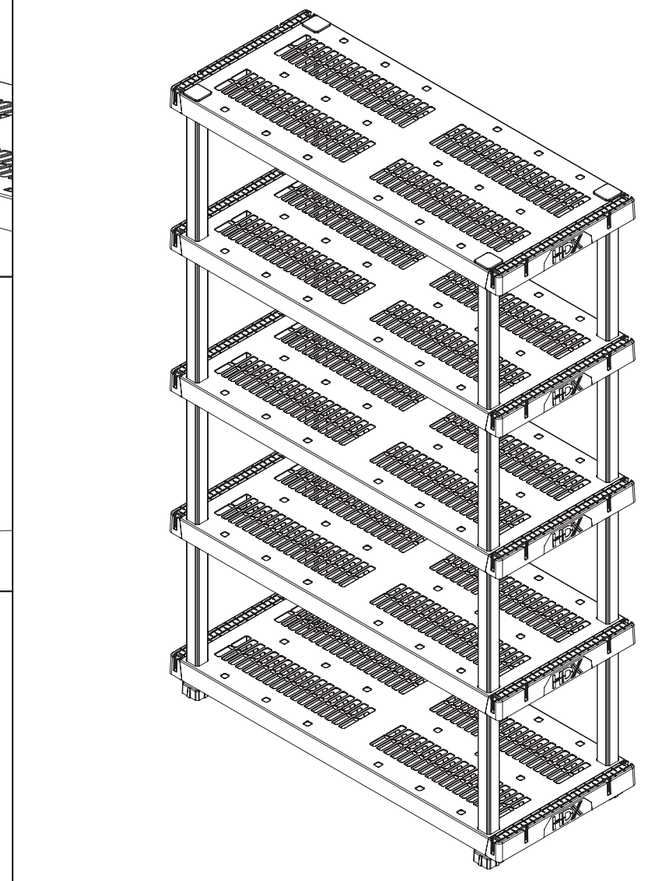

CUSTOMIZE SHELF HEIGHTS
Short and tall pole sizes create over 40 different configurations. Always be sure to use the same pole size to build each shelf section.

