Having Trouble?

Chat with us on your phone

Simply point your phone camera towards the QR code or see our website

ergomaxoffice.com

or email at

customerservice@ecintel.com

Monday - Friday 7:00AM - 3:30PM PST

Purchased your product online?

We would really appreciate it if you can share your experience with others by reviewing our product on the website from which you purchased.

Instruction Manual

Item# ABC256GR/ABC256BK

Crank Height Adjustable Desk Base

Have Questions or Issues? Need help with assembly?

Contact us and we will resolve immediately.
Simply point your phone camera towards the QR code or see our website

Support Hours M-F 7:00AM - 3:30PM (U.S Pacific Time)

Chat with us:
ergomaxoffice.com

Email:
customerservice@ecintel.com

Call:
951-319-4433

Purchased your product online?

We would really appreciate it if you can share your experience with others by reviewing our product on the website from which you purchased.

Warranty

Limited 1-Year Manufacturer Warranty on xbrand.us

Manufacturer warranty covers:

• Parts that are deemed defective within 30 day will be shipped free of charge.

• Any warranty claim after 30 days, will require shipping to be paid by the customer.

Any visible damage due to the neglect, misuse, or abuse will void the limited warranty of the product.

For further information, please contact us:

Chat with us: ergomaxoffice.com

Simply point your phone camera towards the QR code or see our website

Email: customerservice@ecintel.com

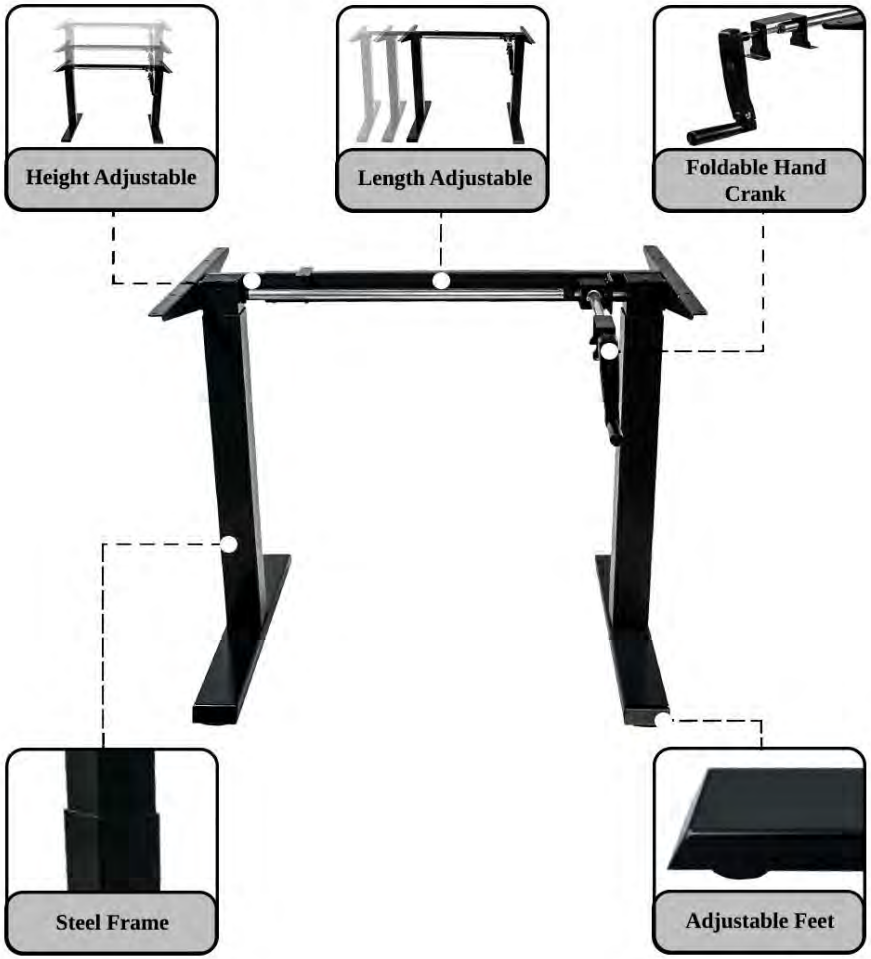

Contents

Contents 2

What is included 3

Assembly instructions 4-5

YouTube video instruction 6

Infographics 7-9

Warranty 10

What is included

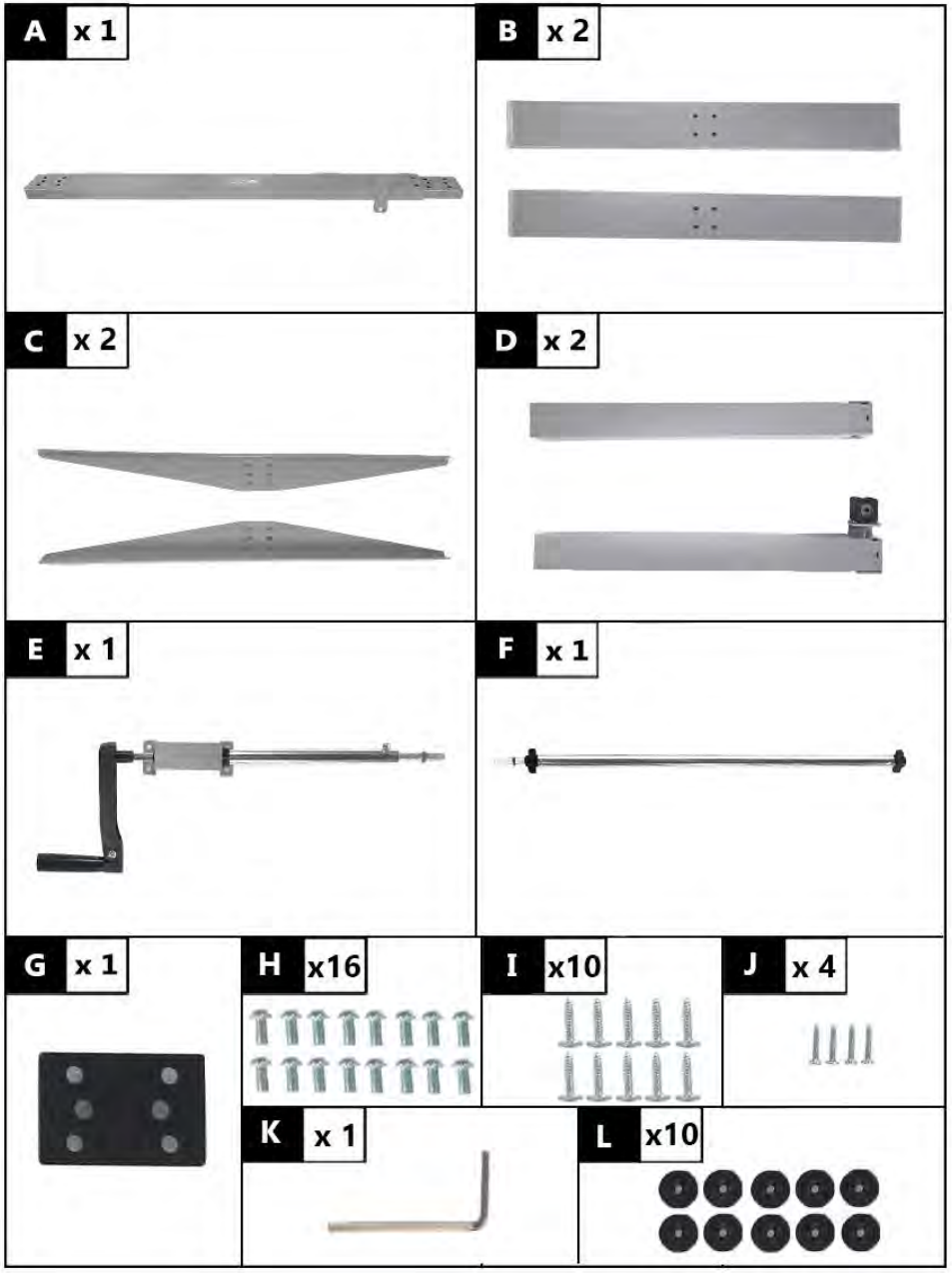

Hand Crank Adjustable Desk Frame

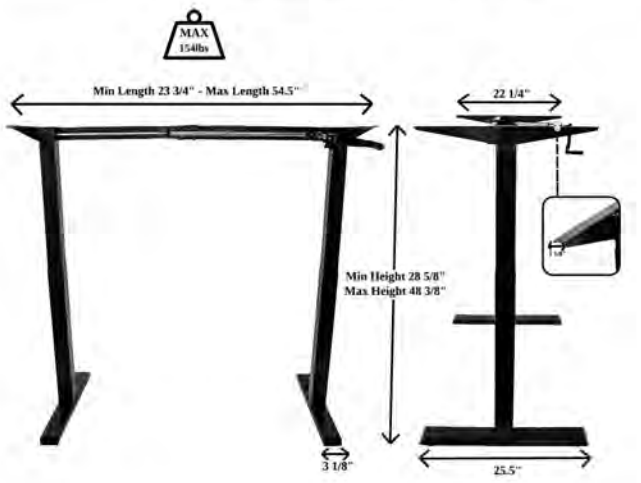

CHOOSE YOUR OWN TABLETOP
INSTALLS IN MINUTES

Assembly instructions

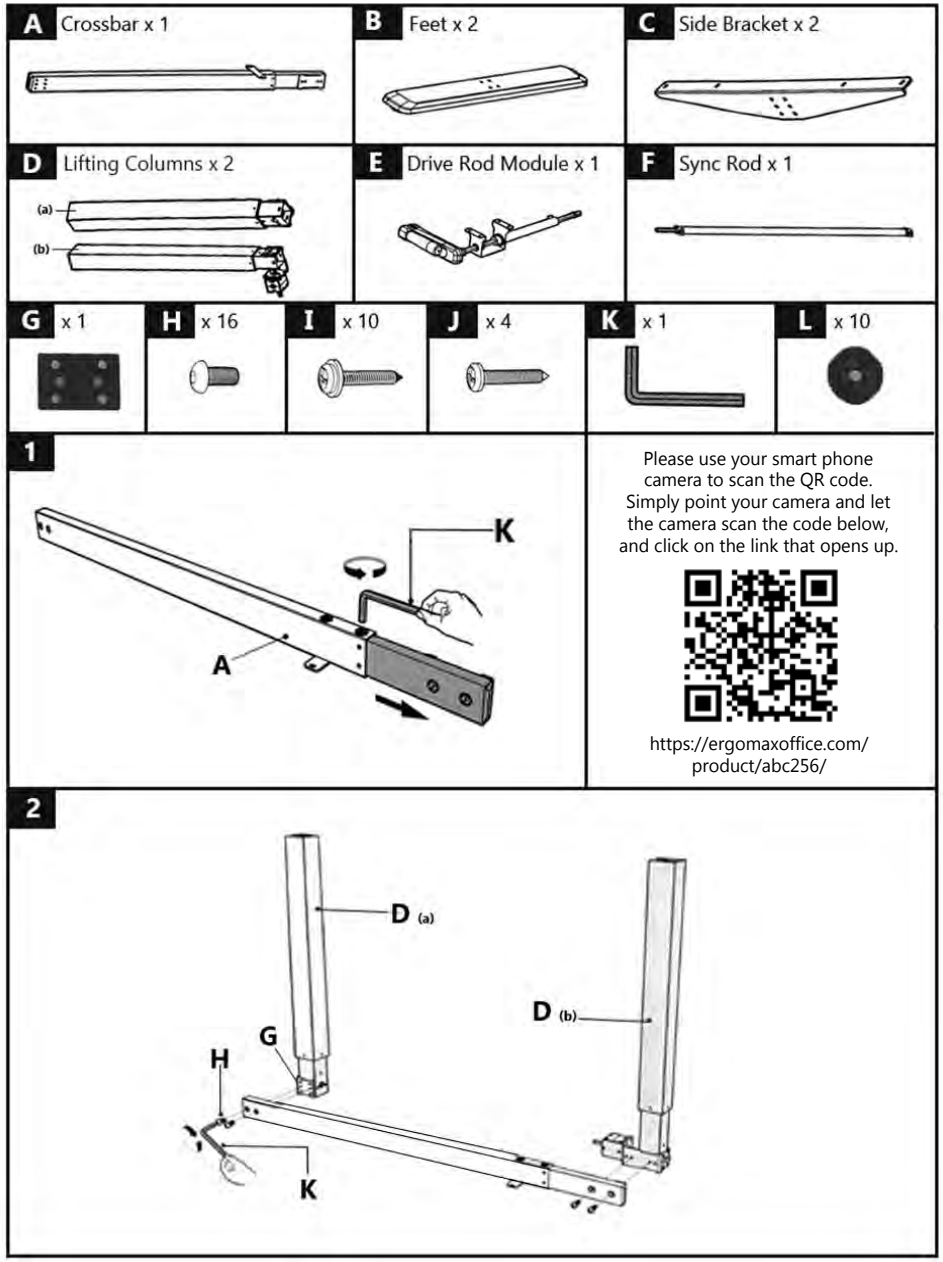

Assembly instructions

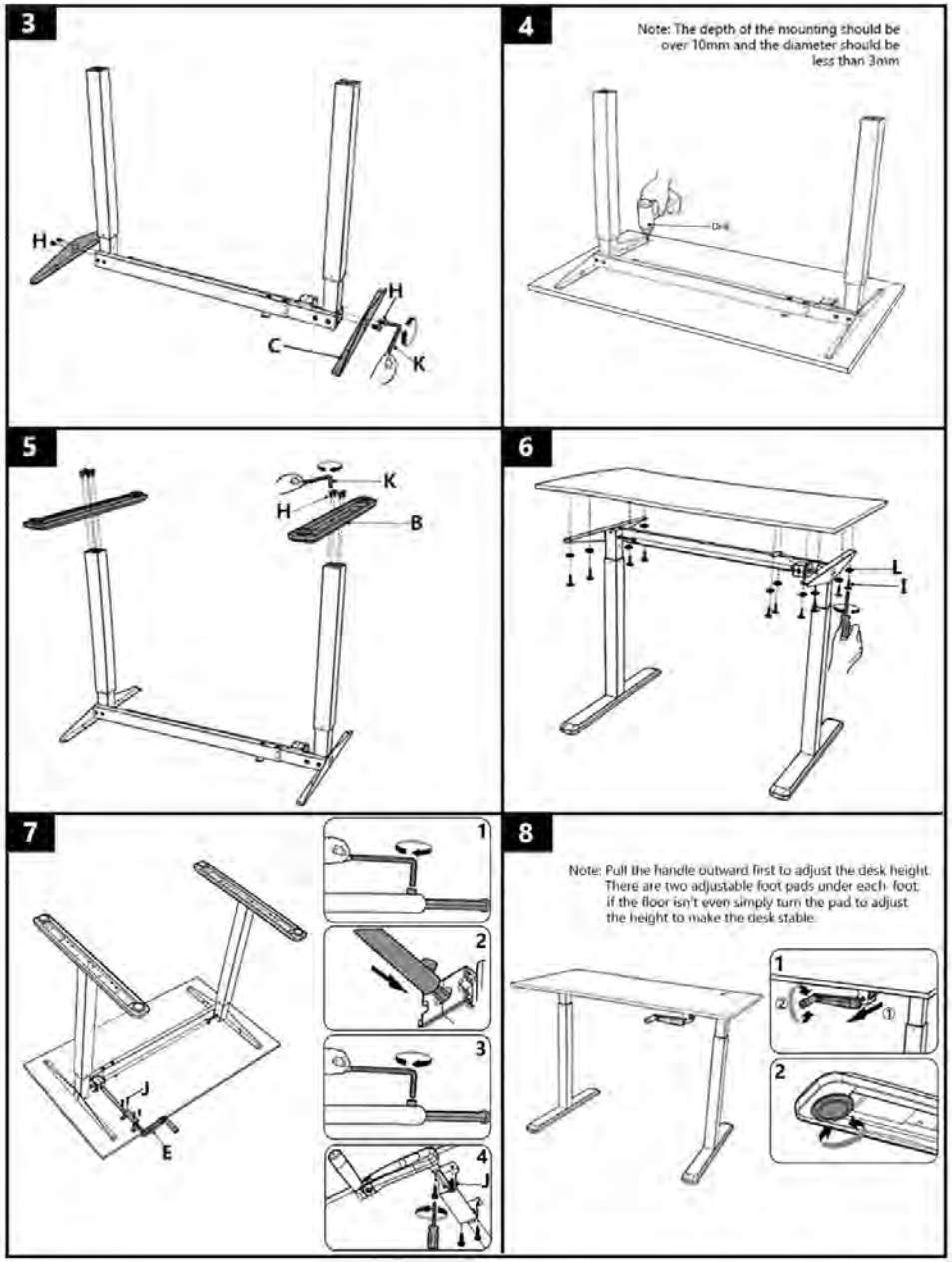

YouTube video instruction

Please use your smart phone camera to scan the QR code. Simply point your camera and let the camera scan the code below, and click on the link that opens up.

https://ergomaxoffice.com/product/abc256/