# MODEL T31739
# 12" VARIABLE-SPEED BENCHTOP DRILL PRESS
## OWNER'S MANUAL
***(For models manufactured since 11/23)***



COPYRIGHT © JANUARY, 2020 BY GRIZZLY INDUSTRIAL, INC., REVISED NOVEMBER, 2023 (BL)
**WARNING: NO PORTION OF THIS MANUAL MAY BE REPRODUCED IN ANY SHAPE OR FORM WITHOUT THE WRITTEN APPROVAL OF GRIZZLY INDUSTRIAL, INC.**
#CS20663 PRINTED IN CHINA V2.11.23

# ⚠ WARNING!

**This manual provides critical safety instructions on the proper setup, operation, maintenance, and service of this machine/tool. Save this document, refer to it often, and use it to instruct other operators.**

**Failure to read, understand and follow the instructions in this manual may result in fire or serious personal injury—including amputation, electrocution, or death.**

**The owner of this machine/tool is solely responsible for its safe use. This responsibility includes but is not limited to proper installation in a safe environment, personnel training and usage authorization, proper inspection and maintenance, manual availability and comprehension, application of safety devices, cutting/sanding/grinding tool integrity, and the usage of personal protective equipment.**

**The manufacturer will not be held liable for injury or property damage from negligence, improper training, machine modifications or misuse.**

# ⚠ WARNING!

**Some dust created by power sanding, sawing, grinding, drilling, and other construction activities contains chemicals known to the State of California to cause cancer, birth defects or other reproductive harm. Some examples of these chemicals are:**

- **Lead from lead-based paints.**
- **Crystalline silica from bricks, cement and other masonry products.**
- **Arsenic and chromium from chemically-treated lumber.**

**Your risk from these exposures varies, depending on how often you do this type of work. To reduce your exposure to these chemicals: Work in a well ventilated area, and work with approved safety equipment, such as those dust masks that are specially designed to filter out microscopic particles.**

# Table of Contents


**INTRODUCTION ..... 2**
- Contact Info ..... 2
- Manual Accuracy ..... 2
- Identification ..... 3
- Controls & Components ..... 4
- Machine Data Sheet ..... 5

**SECTION 1: SAFETY ..... 7**
- Safety Instructions for Machinery ..... 7
- Additional Safety for Drill Presses ..... 9

**SECTION 2: POWER SUPPLY ..... 10**

**SECTION 3: SETUP ..... 12**
- Needed for Setup ..... 12
- Unpacking ..... 12
- Inventory ..... 13
- Hardware Recognition Chart ..... 14
- Cleanup ..... 15
- Site Considerations ..... 15
- Bench Mounting ..... 16
- Assembly ..... 16
- Joining Drill Chuck & Arbor ..... 18
- Test Run ..... 19

**SECTION 4: OPERATIONS ..... 20**
- Operation Overview ..... 20
- Choosing Spindle Speeds ..... 21
- Changing Spindle Speed ..... 22
- Installing/Removing Chuck Arbor ..... 22
- Installing/Removing Drill Bits ..... 24
- Using LED Worklight ..... 24
- Adjusting Depth Stop ..... 24
- Positioning Table ..... 25
- Adjusting Laser Sight ..... 26

**SECTION 5: ACCESSORIES ..... 27**

**SECTION 6: MAINTENANCE ..... 28**
- Schedule ..... 28
- Cleaning & Protecting ..... 28
- Lubrication ..... 28

**SECTION 7: SERVICE ..... 30**
- Troubleshooting ..... 30
- V-Belt Tension & Replacement ..... 32
- Calibrating Depth Stop ..... 32
- Replacing Lasers & LED Worklight ..... 33
- Adjusting Spring Tension ..... 35

**SECTION 8: WIRING ..... 36**
- Wiring Safety Instructions ..... 36
- Wiring Diagram ..... 37

**SECTION 9: PARTS ..... 38**
- Main ..... 38
- Labels & Cosmetics ..... 40

**WARRANTY & RETURNS ..... 41**

# INTRODUCTION

## Contact Info

We stand behind our machines! If you have questions or need help, contact us with the information below. Before contacting, make sure you get the **serial number** and **manufacture date** from the machine ID label. This will help us help you faster.

Grizzly Technical Support
1815 W. Battlefield
Springfield, MO 65807
Phone: (570) 546-9663
Email: techsupport@grizzly.com

We want your feedback on this manual. What did you like about it? Where could it be improved? Please take a few minutes to give us feedback.

Grizzly Documentation Manager
P.O. Box 2069
Bellingham, WA 98227-2069
Email: manuals@grizzly.com

## Manual Accuracy

We are proud to provide a high-quality owner's manual with your new machine!

We made every effort to be exact with the instructions, specifications, drawings, and photographs in this manual. Sometimes we make mistakes, but our policy of continuous improvement also means that **sometimes the machine you receive is slightly different than shown in the manual**.

If you find this to be the case, and the difference between the manual and machine leaves you confused or unsure about something, check our website for an updated version. We post current manuals and manual updates for free on our website at **www.grizzly.com**.

Alternatively, you can call our Technical Support for help. Before calling, make sure you write down the **manufacture date** and **serial number** from the machine ID label (see below). This information is required for us to provide proper tech support, and it helps us determine if updated documentation is available for your machine.

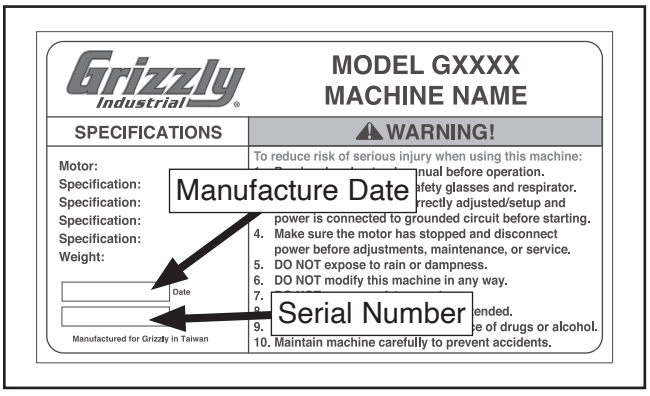

# Identification

Become familiar with the names and locations of the controls and features shown below to better understand the instructions in this manual.

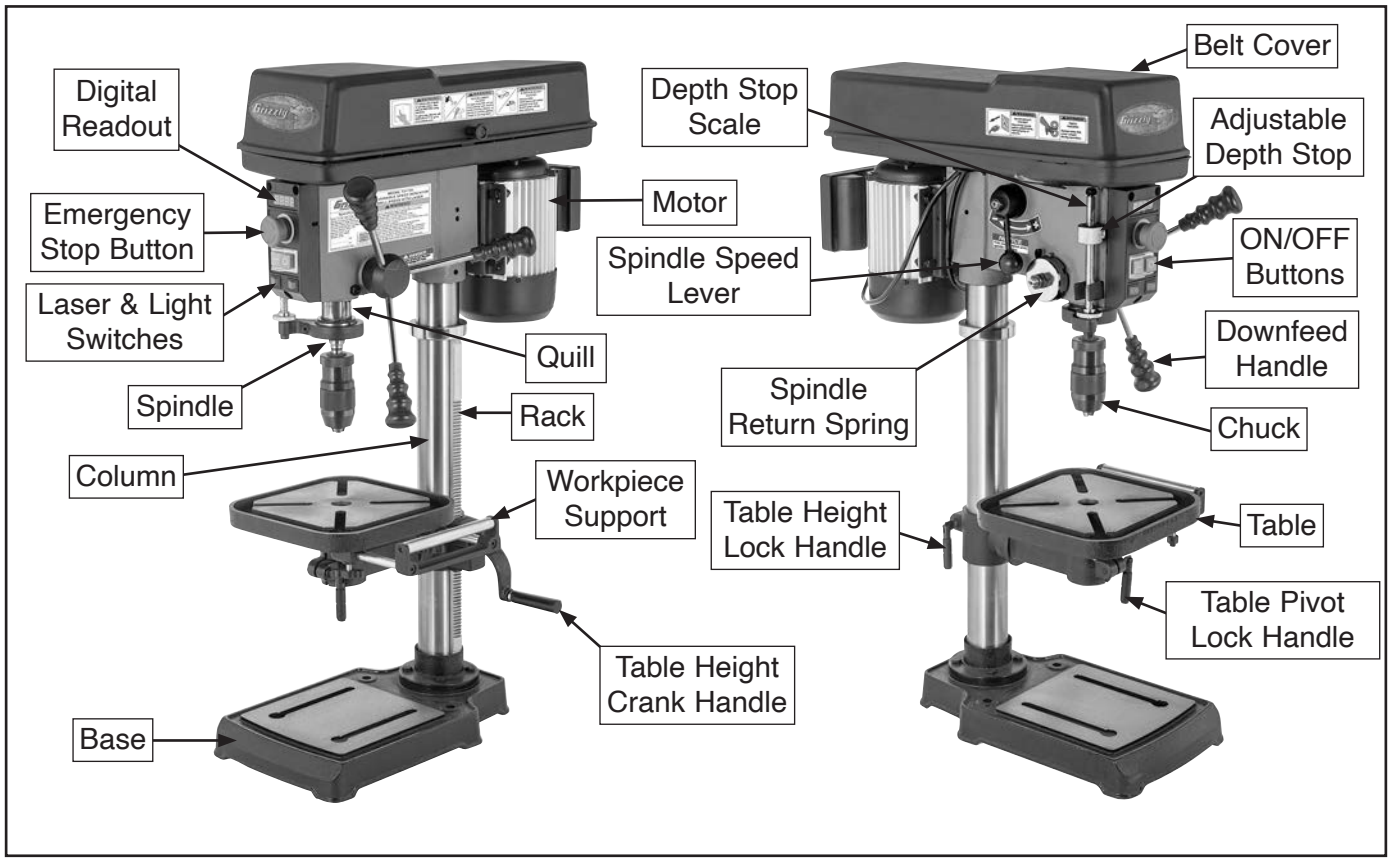


## ⚠WARNING

**For Your Own Safety Read Instruction Manual Before Operating Drill Press**

**a) Wear eye protection.**
**b) Do not wear gloves, necktie, or loose clothing.**
**c) Clamp workpiece or brace against column to prevent rotation.**
**d) Use recommended speed for drill accessory and workpiece material.**

# Controls & Components

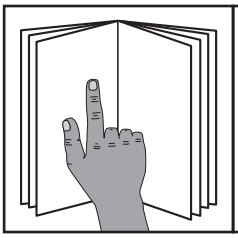

**⚠WARNING**

**To reduce your risk of serious injury, read this entire manual BEFORE using machine.**

Refer to the following figures and descriptions to become familiar with the basic controls and components of this machine. Understanding these items and how they work will help you understand the rest of the manual and minimize your risk of injury when operating this machine.

## Headstock

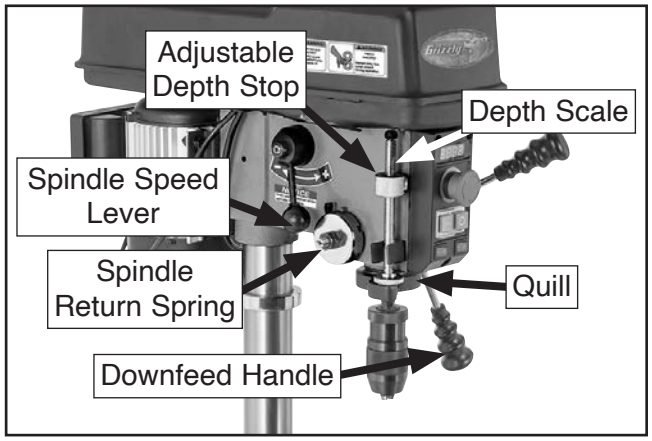


**Figure 1.** Headstock controls.

**Adjustable Depth Stop:** Stops spindle travel at predetermined depth.

**Depth Scale:** Indicates drilling depth and position of depth stop.

**Downfeed Handles:** Moves spindle down when pulled down. Spindle automatically returns to top position when released.

**Spindle Speed Lever:** Adjusts spindle speed rate from 400 to 2700 RPM.

**Spindle Return Spring:** Automatically returns quill into headstock.

**Quill:** Houses spindle and spindle bearings.

## Table

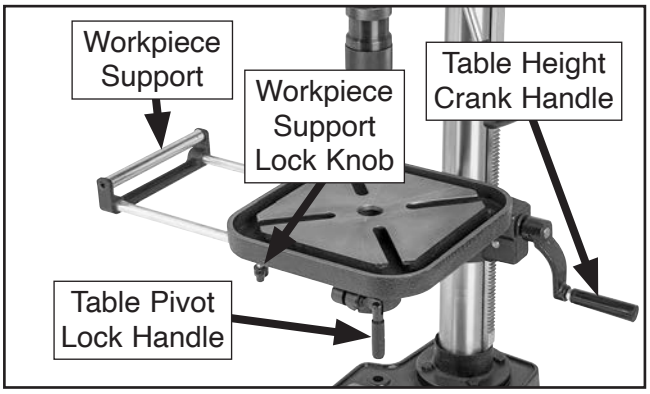


**Figure 2.** Table controls.

**Workpiece Support:** Provides extra support for long workpieces.

**Table Height Crank Handle:** Adjusts table height.

**Table Pivot Lock Handle:** Locks table to keep it from rotating.

**Workpiece Support Lock Knob (1 of 2):** Locks support arm in position.

## Control Panel

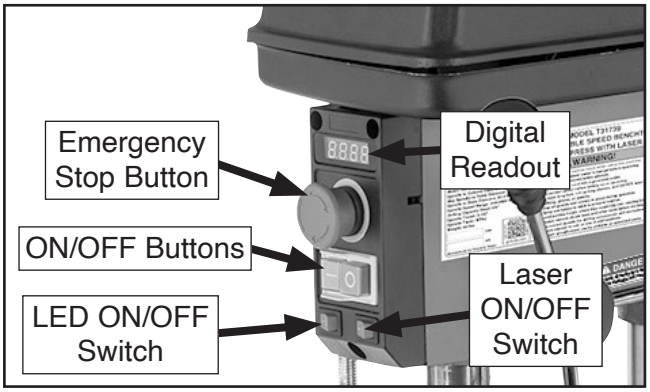


**Figure 3.** Control panel.

**Emergency Stop Button:** Immediately cuts power to motor and control panel when pressed. Twist button clockwise to reset.

**ON/OFF Buttons:** Turns drill press ***ON*** and ***OFF***.

**LED ON/OFF Switch:** Turns work light ***ON*** or ***OFF***.

**Digital Readout:** Displays spindle RPM.

**Laser ON/OFF Switch:** Turns laser sights ***ON*** or ***OFF***.

# MACHINE DATA SHEET

Customer Service #: (570) 546-9663 · To Order Call: (800) 523-4777 · Fax #: (800) 438-5901

## MODEL T31739 12" VARIABLE-SPEED BENCHTOP DRILL PRESS

**Product Dimensions:**

| | |
|---|---|
| Weight | 88 lbs. |
| Width (side-to-side) x Depth (front-to-back) x Height | 13 x 22 x 36 in. |
| Footprint (Length x Width) | 16 x 9-1/2 in. |

**Shipping Dimensions:**

| | |
|---|---|
| Type | Cardboard Box |
| Content | Machine |
| Weight | 93 lbs. |
| Length x Width x Height | 30 x 20 x 12 in. |

**Electrical:**

| | |
|---|---|
| Power Requirement | 120V, Single-Phase, 60 Hz |
| Full-Load Current Rating | 5.1A |
| Minimum Circuit Size | 15A |
| Connection Type | Cord & Plug |
| Power Cord Included | Yes |
| Power Cord Length | 6 ft. |
| Power Cord Gauge | 18 AWG |
| Plug Included | Yes |
| Included Plug Type | 5-15 |
| Switch Type | ON/OFF Push Button |

**Motors:**

**Main**

| | |
|---|---|
| Horsepower | 1/3 HP |
| Phase | Single-Phase |
| Amps | 5.1A |
| Speed | 1150 RPM |
| Type | TEFC Capacitor-Run Induction |
| Power Transfer | Belt |
| Bearings | Shielded & Permanently Lubricated |

**Main Specifications:**

**Operation Information**

| | |
|---|---|
| Type | Bench |
| Swing | 12 in. |
| Spindle Taper | MT#2 |
| Spindle Travel | 3-1/2 in. |
| Max. Distance From Spindle to Column | 6 in. |
| Max. Distance From Spindle to Table | 13-1/4 in. |
| Number of Spindle Speeds | Variable |
| Range of Spindle Speeds | 400 - 2700 RPM |
| Max. Head Swivel | 360 deg. |
| Drilling Capacity (Mild Steel) | 5/8 in. |
| Drill Chuck Type | JT3 Keyless Chuck |
| Drill Chuck Size | 1/32 - 5/8 in. |

**Spindle Information**

| | |
|---|---|
| Distance From Spindle to Base | 20-1/4 in. |
| Quill Diameter | 1.575 in. |

**Table Information**

| | |
|---|---|
| Max. Table Tilt (Left/Right) | 45 deg. |
| Table Swing | 360 deg. |
| Table Swivel Around Center | 360 deg. |
| Table Swivel Around Column | 360 deg. |
| Table Length | 9-5/8 in. |
| Table Width | 9-5/8 in. |
| Table Thickness | 1 in. |
| Vertical Table Travel | 10 in. |
| Number of T-Slots | 4 |
| T-Slot Size | 1/2 in. |
| T-Slot Centers | 3 in. |
| Floor-To-Table Height | 8-7/8 - 18-7/8 in. |

**Construction**

| | |
|---|---|
| Table | Precision-Ground Cast Iron |
| Column | Steel |
| Spindle Housing | Cast Iron |
| Head | Cast Iron |
| Base | Cast Iron |
| Paint Type/Finish | Powder Coated |

**Other Related Information**

| | |
|---|---|
| Base Length | 16-1/4 in. |
| Base Width | 9-5/8 in. |
| Column Diameter | 2-3/8 in. |
| Depth Stop Type | Threaded Rod with Positive Stop |
| Has Work Light | Yes |
| Light Socket Type | 3.5V, LED Bulb |
| Maximum Bulb Wattage | 1 W |

**Other Specifications:**

| | |
|---|---|
| Country of Origin | China |
| Warranty | 1 Year |
| Approximate Assembly & Setup Time | 45 Minutes |
| Serial Number Location | ID Label |
| ISO 9001 Factory | Yes |

**Features:**

Adjustable Laser Sight
Four 1/2" T-Slots
Variable-Speed Spindle Control from 400 - 2700 RPM
Precision-Ground Cast-Iron Table w/7-1/4" Extension
LED Worklight
Spindle Speed Digital Readout
Depth Stop 0-90mm w/Quick-Release
Rack & Pinion Table Elevation Control

**Accessories Included:**

Hex Wrenches 3, 4, 5mm
Drift Key

# SECTION 1: SAFETY

## For Your Own Safety, Read Instruction Manual Before Operating This Machine

**The purpose of safety symbols is to attract your attention to possible hazardous conditions. This manual uses a series of symbols and signal words intended to convey the level of importance of the safety messages. The progression of symbols is described below. Remember that safety messages by themselves do not eliminate danger and are not a substitute for proper accident prevention measures. Always use common sense and good judgment.**

**⚠DANGER** **Indicates an imminently hazardous situation which, if not avoided, WILL result in death or serious injury.**

**⚠WARNING** **Indicates a potentially hazardous situation which, if not avoided, COULD result in death or serious injury.**

**⚠CAUTION** **Indicates a potentially hazardous situation which, if not avoided, MAY result in minor or moderate injury. It may also be used to alert against unsafe practices.**

***NOTICE*** **Alerts the user to useful information about proper operation of the machine to avoid machine damage.**

## Safety Instructions for Machinery

### ⚠WARNING

**OWNER'S MANUAL.** Read and understand this owner's manual BEFORE using machine.

**TRAINED OPERATORS ONLY.** Untrained operators have a higher risk of being hurt or killed. Only allow trained/supervised people to use this machine. When machine is not being used, disconnect power, remove switch keys, or lock-out machine to prevent unauthorized use—especially around children. Make your workshop kid proof!

**DANGEROUS ENVIRONMENTS.** Do not use machinery in areas that are wet, cluttered, or have poor lighting. Operating machinery in these areas greatly increases the risk of accidents and injury.

**MENTAL ALERTNESS REQUIRED.** Full mental alertness is required for safe operation of machinery. Never operate under the influence of drugs or alcohol, when tired, or when distracted.

**ELECTRICAL EQUIPMENT INJURY RISKS.** You can be shocked, burned, or killed by touching live electrical components or improperly grounded machinery. To reduce this risk, only allow qualified service personnel to do electrical installation or repair work, and always disconnect power before accessing or exposing electrical equipment.

**DISCONNECT POWER FIRST.** Always disconnect machine from power supply BEFORE making adjustments, changing tooling, or servicing machine. This prevents an injury risk from unintended startup or contact with live electrical components.

**EYE PROTECTION.** Always wear ANSI-approved safety glasses or a face shield when operating or observing machinery to reduce the risk of eye injury or blindness from flying particles. Everyday eyeglasses are NOT approved safety glasses.

# ⚠WARNING

**WEARING PROPER APPAREL.** Do not wear loose clothing, gloves, neckties, or jewelry that can become entangled in moving parts. Always tie back or cover long hair. Wear non-slip footwear to reduce risk of slipping and losing control or accidentally contacting cutting tool or moving parts.

**HAZARDOUS DUST.** Dust created by machinery operations may cause cancer, birth defects, or long-term respiratory damage. Be aware of dust hazards associated with each workpiece material. Always wear a NIOSH-approved respirator to reduce your risk.

**HEARING PROTECTION.** Always wear hearing protection when operating or observing loud machinery. Extended exposure to this noise without hearing protection can cause permanent hearing loss.

**REMOVE ADJUSTING TOOLS.** Tools left on machinery can become dangerous projectiles upon startup. Never leave chuck keys, wrenches, or any other tools on machine. Always verify removal before starting!

**USE CORRECT TOOL FOR THE JOB.** Only use this tool for its intended purpose—do not force it or an attachment to do a job for which it was not designed. Never make unapproved modifications—modifying tool or using it differently than intended may result in malfunction or mechanical failure that can lead to personal injury or death!

**AWKWARD POSITIONS.** Keep proper footing and balance at all times when operating machine. Do not overreach! Avoid awkward hand positions that make workpiece control difficult or increase the risk of accidental injury.

**CHILDREN & BYSTANDERS.** Keep children and bystanders at a safe distance from the work area. Stop using machine if they become a distraction.

**GUARDS & COVERS.** Guards and covers reduce accidental contact with moving parts or flying debris. Make sure they are properly installed, undamaged, and working correctly BEFORE operating machine.

**FORCING MACHINERY.** Do not force machine. It will do the job safer and better at the rate for which it was designed.

**NEVER STAND ON MACHINE.** Serious injury may occur if machine is tipped or if the cutting tool is unintentionally contacted.

**STABLE MACHINE.** Unexpected movement during operation greatly increases risk of injury or loss of control. Before starting, verify machine is stable and mobile base (if used) is locked.

**USE RECOMMENDED ACCESSORIES.** Consult this owner's manual or the manufacturer for recommended accessories. Using improper accessories will increase the risk of serious injury.

**UNATTENDED OPERATION.** To reduce the risk of accidental injury, turn machine ***OFF*** and ensure all moving parts completely stop before walking away. Never leave machine running while unattended.

**MAINTAIN WITH CARE.** Follow all maintenance instructions and lubrication schedules to keep machine in good working condition. A machine that is improperly maintained could malfunction, leading to serious personal injury or death.

**DAMAGED PARTS.** Regularly inspect machine for damaged, loose, or mis-adjusted parts—or any condition that could affect safe operation. Immediately repair/replace BEFORE operating machine. For your own safety, DO NOT operate machine with damaged parts!

**MAINTAIN POWER CORDS.** When disconnecting cord-connected machines from power, grab and pull the plug—NOT the cord. Pulling the cord may damage the wires inside. Do not handle cord/plug with wet hands. Avoid cord damage by keeping it away from heated surfaces, high traffic areas, harsh chemicals, and wet/damp locations.

**EXPERIENCING DIFFICULTIES.** If at any time you experience difficulties performing the intended operation, stop using the machine! Contact our Technical Support at (570) 546-9663.

# Additional Safety for Drill Presses

## ⚠WARNING

**Serious injury or death can occur from getting clothing, jewelry, or long hair entangled in rotating spindle or bit/cutting tool. Contact with rotating bit/cutting tool can result in severe cuts or amputation of fingers. Flying metal chips can cause blindness or eye injuries. Broken bits/cutting tools, unsecured workpieces, chuck keys, or other adjustment tools thrown from rotating spindle can strike nearby operator or bystanders with deadly force. To reduce the risk of these hazards, operator and bystanders MUST completely heed hazards and warnings below.**

**EYE/FACE/HAND PROTECTION.** Flying chips created by drilling can cause eye injuries or blindness. Always wear a face shield in addition to safety glasses. Always keep hands and fingers away from drill bit/cutting tool. Avoid awkward hand positions, where a sudden slip could cause hand to move into bit/cutting tool.

**AVOIDING ENTANGLEMENT.** DO NOT wear loose clothing, gloves, or jewelry. Tie back long hair. Keep all guards in place and secure. Always allow spindle to stop on its own. DO NOT stop spindle using your hand or any other object.

**REMOVING ADJUSTMENT TOOLS.** Chuck key, wrenches, and other tools left on machine can become deadly projectiles when spindle is started. Remove all loose items or tools used on spindle immediately after use.

**CORRECT SPINDLE SPEED.** Using wrong spindle speed can cause bits/cutting tools to break and strike operator or bystanders. Follow recommended speeds and feeds for each size/type of bit/cutting tool and workpiece material.

**SECURING BIT/CUTTING TOOL.** Firmly secure bit/cutting tool in chuck so it cannot fly out of spindle during operation or startup.

**DRILLING PREPARATION.** To avoid loss of drilling control or bit breakage, only drill into a flat surface that is approximately perpendicular to bit. Clear table of all objects before starting spindle. Never start spindle with bit pressed against workpiece.

**SECURING TABLE AND HEADSTOCK.** To avoid loss of control leading to bit breakage or accidental contact with tool/bit, tighten all table and headstock locks before operating drill press.

**WORKPIECE CONTROL.** An unsecured workpiece may unexpectedly shift, spin out of control, or be thrown if bit/cutting tool "grabs" during operation. Clamp workpiece to table or in table-mounted vise, or brace against column to prevent rotation. NEVER hold workpiece by hand during operation. NEVER start machine with bit/cutting tool touching workpiece; allow spindle to gain full speed before drilling into workpiece.

**INSPECTING BIT/CUTTING TOOL.** Damaged bits/cutting tools may break apart during operation and hit operator or bystanders. Dull bits/cutting tools increase cutting resistance and are more likely to grab and spin/throw workpiece. Always inspect bits/cutting tools for sharpness, chips, or cracks before each use. Replace dull, chipped, or cracked bits/cutting tools immediately.

## ⚠WARNING

**Like all machinery there is potential danger when operating this machine. Accidents are frequently caused by lack of familiarity or failure to pay attention. Use this machine with respect and caution to decrease the risk of operator injury. If normal safety precautions are overlooked or ignored, serious personal injury may occur.**

## ⚠CAUTION

**No list of safety guidelines can be complete. Every shop environment is different. Always consider safety first, as it applies to your individual working conditions. Use this and other machinery with caution and respect. Failure to do so could result in serious personal injury, damage to equipment, or poor work results.**

# SECTION 2: POWER SUPPLY

## Availability

Before installing the machine, consider the availability and proximity of the required power supply circuit. If an existing circuit does not meet the requirements for this machine, a new circuit must be installed. To minimize the risk of electrocution, fire, or equipment damage, installation work and electrical wiring must be done by an electrician or qualified service personnel in accordance with all applicable codes and standards.



**⚠WARNING**

**Electrocution, fire, shock, or equipment damage may occur if machine is not properly grounded and connected to power supply.**

## Full-Load Current Rating

The full-load current rating is the amperage a machine draws at 100% of the rated output power. On machines with multiple motors, this is the amperage drawn by the largest motor or sum of all motors and electrical devices that might operate at one time during normal operations.

**Full-Load Current Rating at 120V .... 5.1 Amps**

The full-load current is not the maximum amount of amps that the machine will draw. If the machine is overloaded, it will draw additional amps beyond the full-load rating.

If the machine is overloaded for a sufficient length of time, damage, overheating, or fire may result—especially if connected to an undersized circuit. To reduce the risk of these hazards, avoid overloading the machine during operation and make sure it is connected to a power supply circuit that meets the specified circuit requirements.

**⚠WARNING**

**Serious injury could occur if you connect machine to power before completing setup process. DO NOT connect to power until instructed later in this manual.**

## 120V Circuit Requirements

This machine is prewired to operate on a power supply circuit that has a verified ground and meets the following requirements:

**Nominal Voltage ..... 110V, 115V, 120V**
**Cycle ..... 60 Hz**
**Phase ..... Single-Phase**
**Power Supply Circuit ..... 15 Amps**

A power supply circuit includes all electrical equipment between the breaker box or fuse panel in the building and the machine. The power supply circuit used for this machine must be sized to safely handle the full-load current drawn from the machine for an extended period of time. (If this machine is connected to a circuit protected by fuses, use a time delay fuse marked D.)

**⚠CAUTION**

**For your own safety and protection of property, consult an electrician if you are unsure about wiring practices or electrical codes in your area.**

**Note:** *Circuit requirements in this manual apply to a dedicated circuit—where only one machine will be running on the circuit at a time. If machine will be connected to a shared circuit where multiple machines may be running at the same time, consult an electrician or qualified service personnel to ensure circuit is properly sized for safe operation.*

## Grounding & Plug Requirements

This machine MUST be grounded. In the event of certain malfunctions or breakdowns, grounding reduces the risk of electric shock by providing a path of least resistance for electric current.

This machine is equipped with a power cord that has an equipment-grounding wire and a grounding plug. Only insert plug into a matching receptacle (outlet) that is properly installed and grounded in accordance with all local codes and ordinances. DO NOT modify the provided plug!

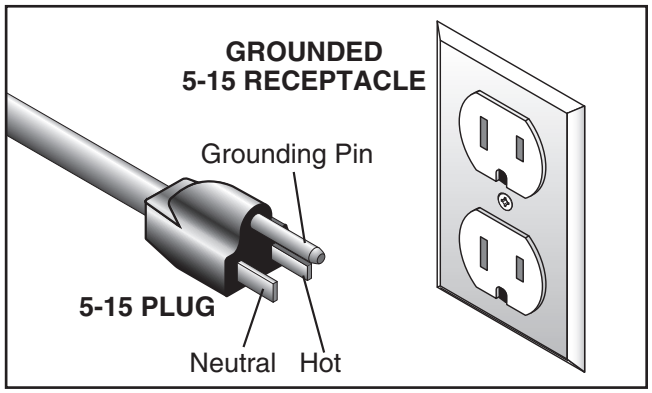


**Figure 4.** Typical 5-15 plug and receptacle.

**⚠CAUTION**

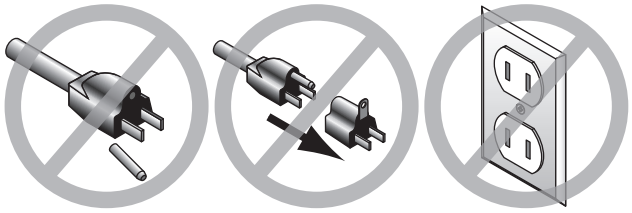

**SHOCK HAZARD!**

**Two-prong outlets do not meet the grounding requirements for this machine. Do not modify or use an adapter on the plug provided—if it will not fit the outlet, have a qualified electrician install the proper outlet with a verified ground.**

Improper connection of the equipment-grounding wire can result in a risk of electric shock. The wire with green insulation (with or without yellow stripes) is the equipment-grounding wire. If repair or replacement of the power cord or plug is necessary, do not connect the equipment-grounding wire to a live (current carrying) terminal.

Check with a qualified electrician or service personnel if you do not understand these grounding requirements, or if you are in doubt about whether the tool is properly grounded. If you ever notice that a cord or plug is damaged or worn, disconnect it from power, and immediately replace it with a new one.

## Extension Cords

We do not recommend using an extension cord with this machine. If you must use an extension cord, only use it if absolutely necessary and only on a temporary basis.

Extension cords cause voltage drop, which can damage electrical components and shorten motor life. Voltage drop increases as the extension cord size gets longer and the gauge size gets smaller (higher gauge numbers indicate smaller sizes).

Any extension cord used with this machine must be in good condition and contain a ground wire and matching plug/receptacle. Additionally, it must meet the following size requirements:

**Minimum Gauge Size.....16 AWG**
**Maximum Length (Shorter is Better).....50 ft.**

# SECTION 3: SETUP

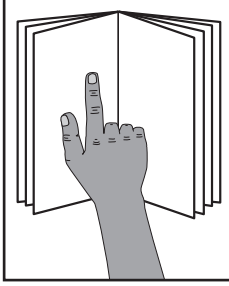

**⚠WARNING**

**This machine presents serious injury hazards to untrained users. Read through this entire manual to become familiar with the controls and operations before starting the machine!**



**⚠WARNING**

**Wear safety glasses during the entire setup process!**



**⚠WARNING**

**This machine and its components are very heavy. Get lifting help or use power lifting equipment such as a forklift to move heavy items.**

## Needed for Setup

The following items are needed, but not included, for the setup/assembly of this machine.

| Description | Qty |
|---|---|
| • Safety Glasses (for each person) | 1 |
| • Solvent/Cleaner | 1 |
| • Shop Rags | 1 |
| • Lifting Equipment (Rated for at least 100 lbs.) | 1 |
| • Assistant for Lifting | 1 |
| • Plumb Bob | 1 |
| • Ruler | 1 |

## Unpacking

This machine was carefully packaged for safe transport. When unpacking, separate all enclosed items from packaging materials and inspect them for shipping damage. ***If items are damaged, please call us immediately at (570) 546-9663.***

**IMPORTANT:** Save all packaging materials until you are completely satisfied with the machine and have resolved any issues between Grizzly or the shipping agent. *You MUST have the original packaging to file a freight claim. It is also extremely helpful if you need to return your machine later.*

# Inventory

The following is a list of items shipped with your machine. Before beginning setup, lay these items out and inventory them.

If any non-proprietary parts are missing (e.g. a nut or a washer), we will gladly replace them; or for the sake of expediency, replacements can be obtained at your local hardware store.

## *NOTICE*

**If you cannot find an item on this list, carefully check around/inside the machine and packaging materials. Often, these items get lost in packaging materials while unpacking or they are pre-installed at the factory.**

| Box 1 (Figure 5) | | Qty |
|---|---|---|
| **A.** | Table Assembly | 1 |
| **B.** | Headstock Assembly | 1 |
| **C.** | Downfeed Handles | 3 |
| **D.** | Speed Lever | 1 |
| **E.** | Column Assembly | 1 |
| **F.** | Chuck 1/32"-5/8" JT3 Keyless | 1 |
| **G.** | Chuck Arbor JT3 x MT2 | 1 |
| **H.** | Table Lock Handles | 2 |
| **I.** | Table Height Crank Handle | 1 |
| **J.** | Drift Key | 1 |
| **K.** | Hex Wrenches 3, 4, 5mm | 1 Ea. |
| **L.** | Hex Bolts M8-1.25 x 20 | 4 |
| **M.** | Base | 1 |

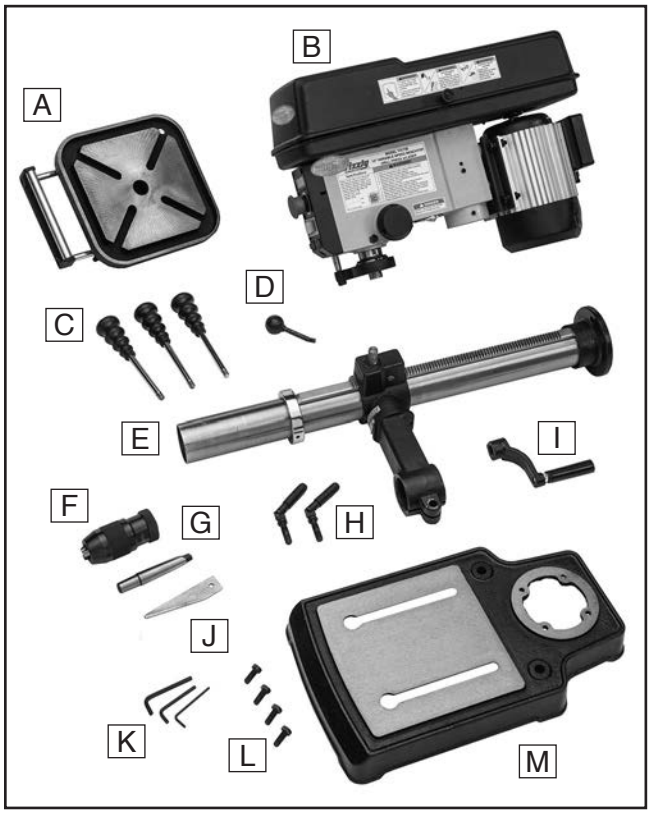


**Figure 5.** T31739 loose parts inventory.

# Hardware Recognition Chart

USE THIS CHART TO MATCH UP HARDWARE DURING THE INVENTORY AND ASSEMBLY PROCESS.

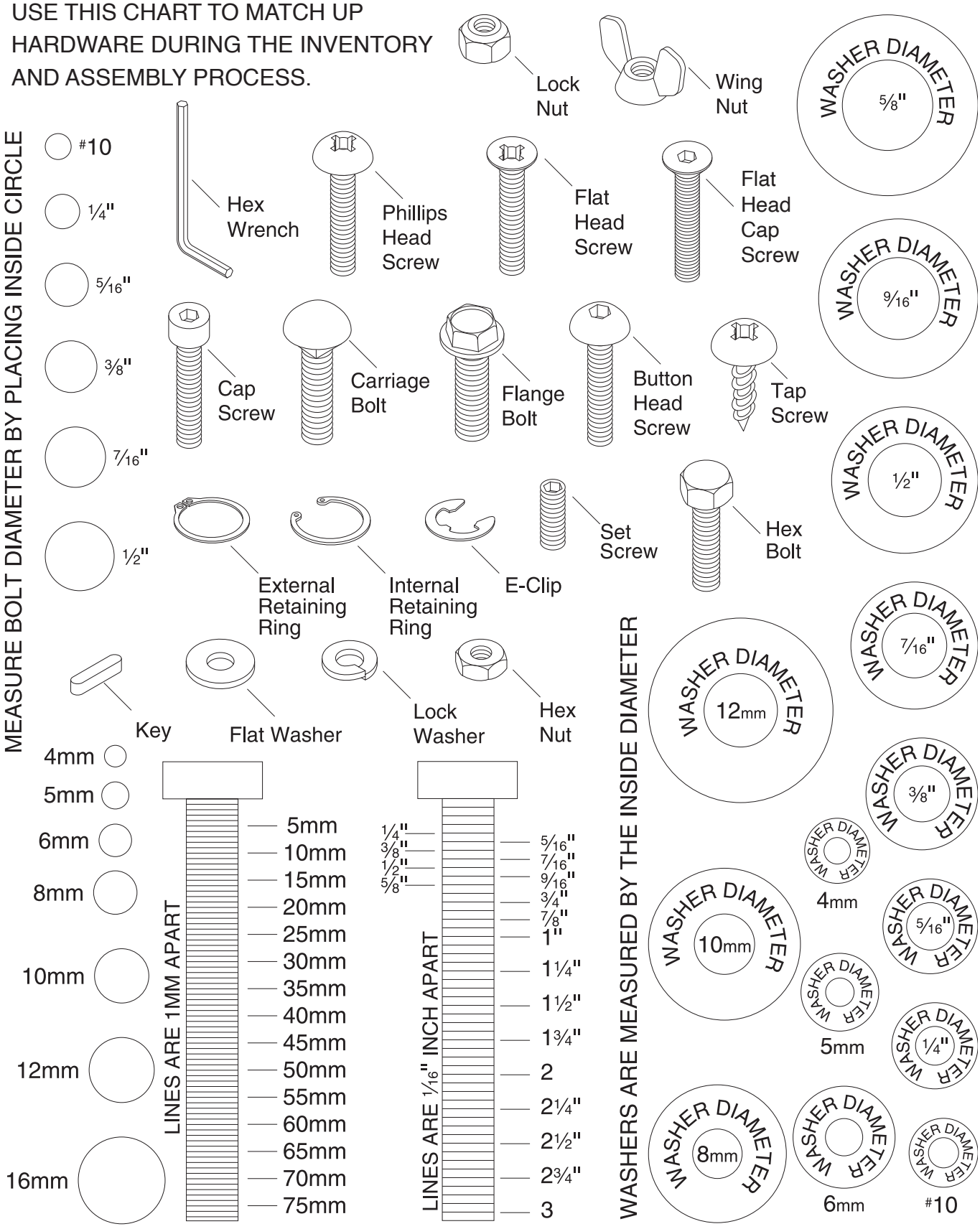






# Cleanup

The unpainted surfaces of your machine are coated with a heavy-duty rust preventative that prevents corrosion during shipment and storage. This rust preventative works extremely well, but it will take a little time to clean.

Be patient and do a thorough job cleaning your machine. The time you spend doing this now will give you a better appreciation for the proper care of your machine's unpainted surfaces.

There are many ways to remove this rust preventative, but the following steps work well in a wide variety of situations. Always follow the manufacturer's instructions with any cleaning product you use and make sure you work in a well-ventilated area to minimize exposure to toxic fumes.

**Before cleaning, gather the following:**

- Disposable rags
- Cleaner/degreaser (WD•40 works well)
- Safety glasses & disposable gloves
- Plastic paint scraper (optional)

**Basic steps for removing rust preventative:**

**1.** Put on safety glasses.

**2.** Coat the rust preventative with a liberal amount of cleaner/degreaser, then let it soak for 5–10 minutes.

**3.** Wipe off the surfaces. If your cleaner/degreaser is effective, the rust preventative will wipe off easily. If you have a plastic paint scraper, scrape off as much as you can first, then wipe off the rest with the rag.

**4.** Repeat **Steps 2–3** as necessary until clean, then coat all unpainted surfaces with a quality metal protectant to prevent rust.

***NOTICE***

**Avoid harsh solvents like acetone or brake parts cleaner that may damage painted surfaces. Always test on a small, inconspicuous location first.**

# Site Considerations

## Workbench Load

Refer to the **Machine Data Sheet** for the weight and footprint specifications of your machine. Some workbenches may require additional reinforcement to support the weight of the machine and workpiece materials.

## Placement Location

Consider anticipated workpiece sizes and additional space needed for auxiliary stands, work tables, or other machinery when establishing a location for this machine in the shop. Below is the minimum amount of space needed for the machine.

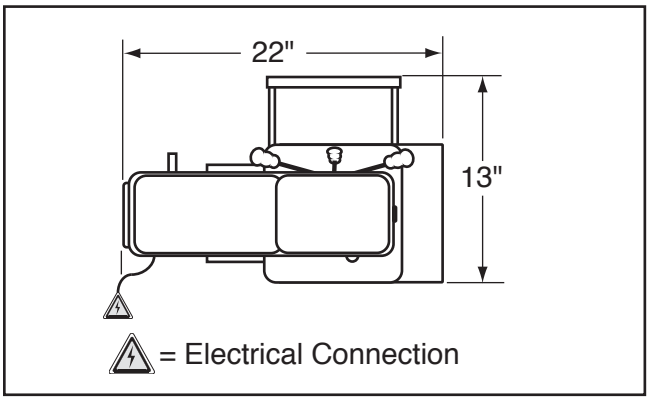


**Figure 6.** Minimum working clearances.

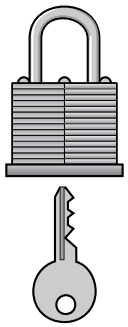

**⚠CAUTION**

**Children and visitors may be seriously injured if unsupervised around this machine. Lock entrances to the shop or disable start switch or power connection to prevent unsupervised use.**

# Bench Mounting

**Number of Mounting Holes ..... 4**
**Diameter of Mounting Hardware Needed .. ½"**

The base of this machine has mounting holes that allow it to be fastened to a workbench or other mounting surface to prevent it from moving during operation and causing accidental injury or damage.

The strongest mounting option is a "Through Mount" (see example below) where holes are drilled all the way through the workbench—and hex bolts, washers, and hex nuts are used to secure the machine in place.

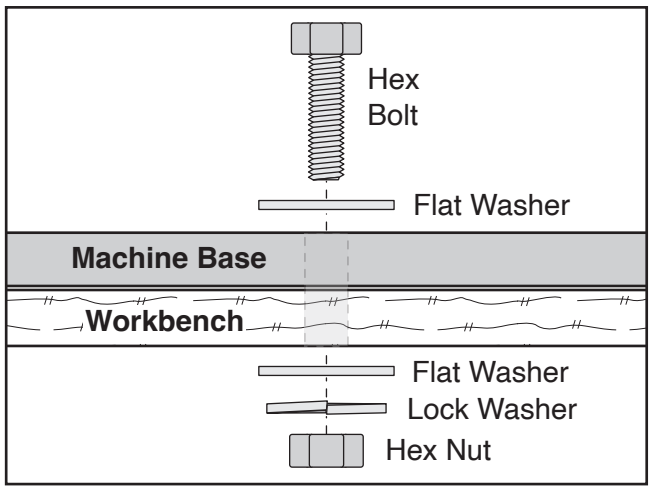


**Figure 7.** "Through Mount" setup.

Another option is a "direct mount" (see example below) where the machine is secured directly to the workbench with lag screws and washers.

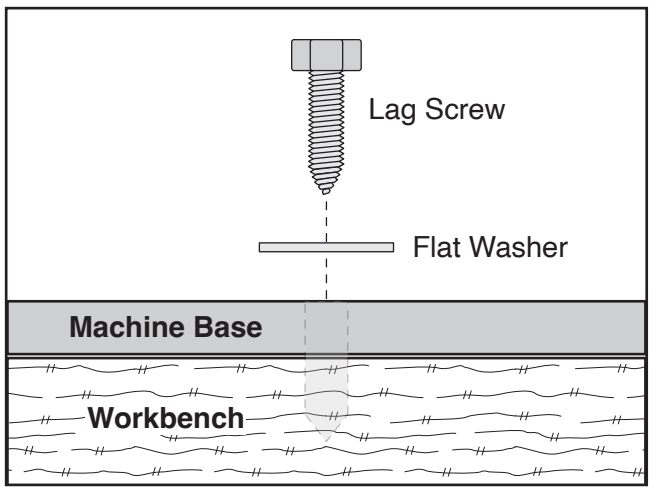


**Figure 8.** "Direct Mount" setup.

# Assembly

The machine must be fully assembled before it can be operated. Before beginning the assembly process, refer to **Needed for Setup** and gather all listed items. To ensure the assembly process goes smoothly, first clean any parts that are covered or coated in heavy-duty rust preventative (if applicable).

**To assemble machine:**

1. Attach column to base using (4) M8-1.25 x 20 hex bolts (see **Figure 9**).

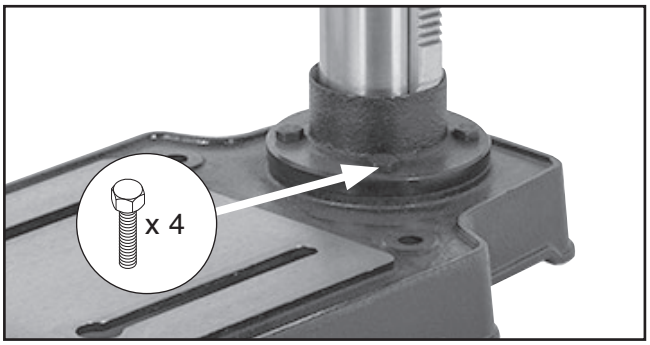


**Figure 9.** Column attached to base.



**⚠CAUTION**

**The headstock is very heavy. You MUST have assistance when moving, lifting, or mounting the headstock on the column and base assembly.**

2. Lift headstock and fit it onto top of column (see **Figure 10**).



**Figure 10.** Headstock placed on column.

3. Suspend a plumb bob from center of headstock spindle so it is over tape/ruler, as shown in **Figure 11**.

4. Center headstock directly over base as indicated by plumb bob and ruler (see **Figure 11**).

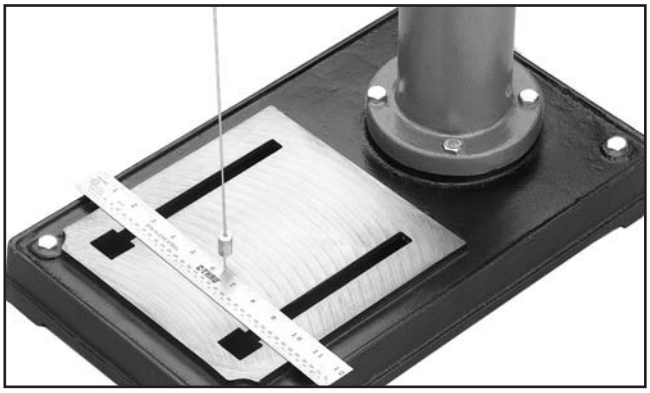

**Figure 11.** Example of using plumb bob to align headstock to base.

5. Tighten (2) pre-installed set screws to secure headstock to column (see **Figure 12**).

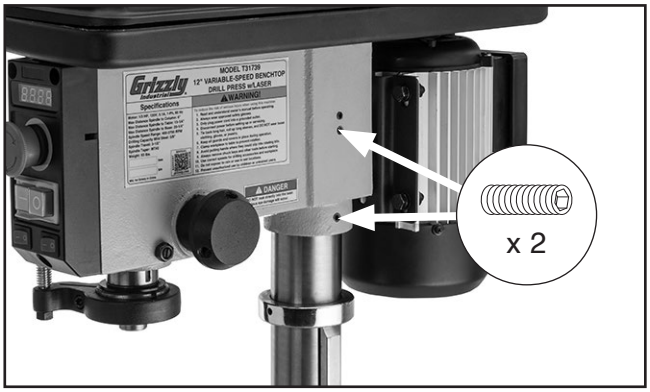


**Figure 12.** Location of set screws that secure headstock to column.

6. Attach table height crank handle to table arm (see **Figure 13**) and secure by tightening pre-installed set screw against worm shaft.

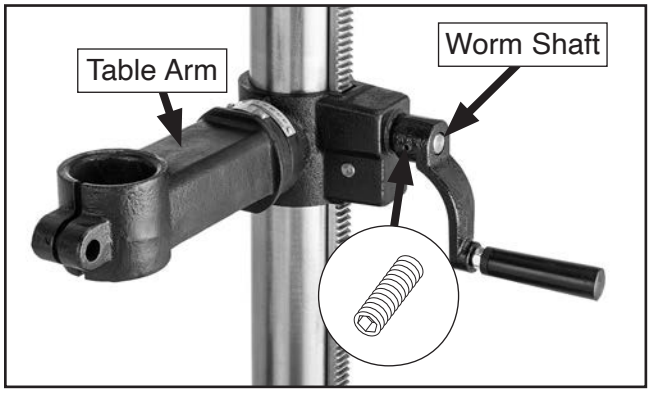


**Figure 13.** Table height crank handle attached to table arm.

7. Thread (1) table height lock handle into worm gear housing cartridge (see **Figure 14**) and tighten until table arm will not move.

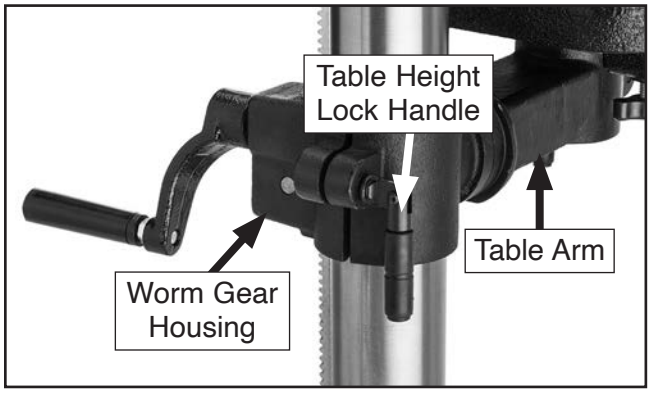


**Figure 14.** Table height lock handle inserted into cartridge.

8. Install table into table mounting arm (see **Figure 15**).

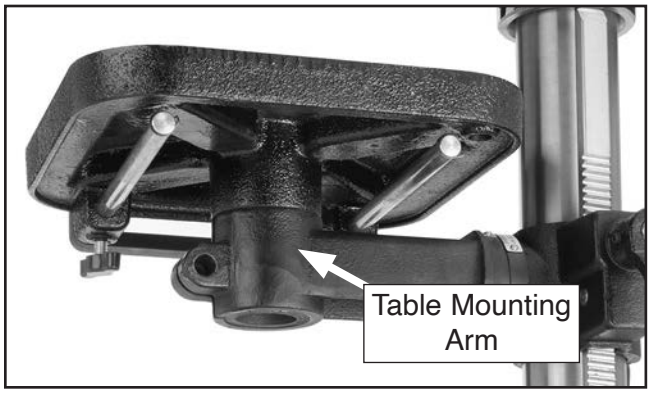


**Figure 15.** Table installed into table arm.

9. Thread (1) table pivot lock handle into table mounting arm cartridge (see **Figure 16**) and tighten until table is secure.

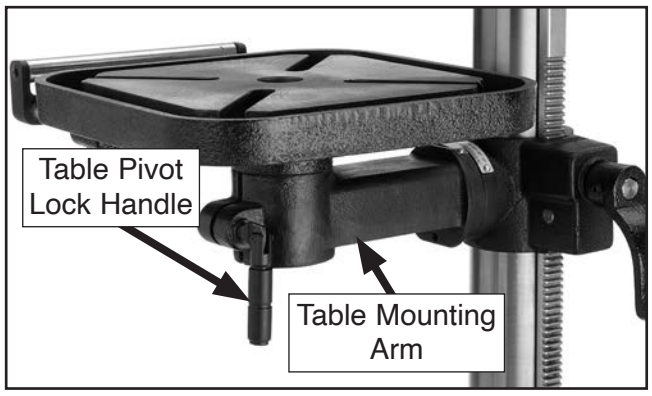


**Figure 16.** Table secured with table pivot lock handle.

10. Thread (3) downfeed handles into downfeed hub, as shown in **Figure 17**.

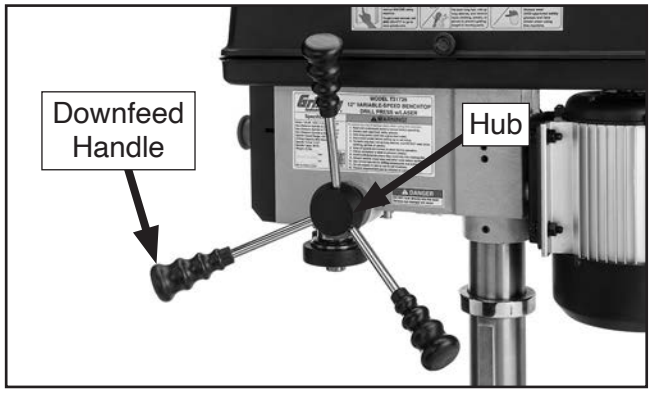


**Figure 17.** Downfeed handles installed in hub.

11. Thread spindle speed lever into speed adjustment hub (see **Figure 18**).

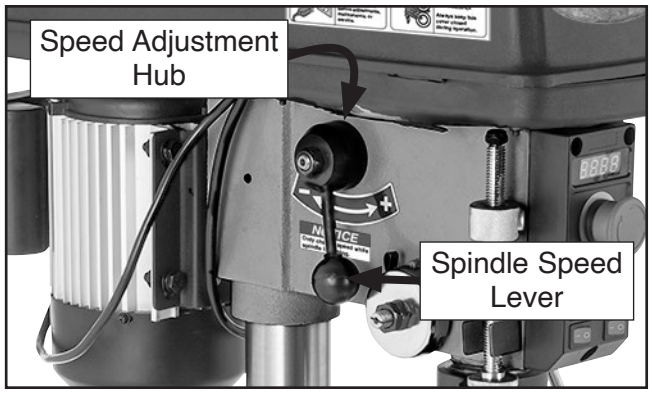


**Figure 18.** Spindle speed lever installed.

# Joining Drill Chuck & Arbor

An arbor is included for the drill chuck that comes with this machine. The following procedure describes how to install the arbor in the chuck.

After the arbor is installed in the drill chuck, it is very difficult to separate the assembly. If you would like to use a different chuck in the future, we recommend obtaining a new arbor.

**IMPORTANT: DO NOT** install the drill chuck and arbor assembly into the spindle until **AFTER** the test run.

**To join drill chuck and arbor:**

1. Use acetone or lacquer thinner to clean drill chuck and arbor mating surfaces, especially the bore.

2. Retract chuck jaws completely into chuck.

3. Insert small end of arbor into chuck.

4. Hold assembly by the arbor and tap chuck onto a block of wood with medium force, as illustrated below.

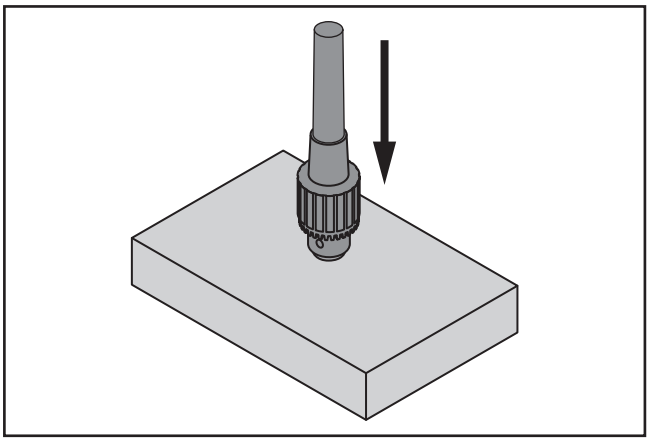

**Figure 19.** Tapping drill chuck/arbor on block of wood.

5. Attempt to separate drill chuck and arbor by hand—if they separate, repeat **Steps 3–4**.

# Test Run

Once assembly is complete, test run the machine to ensure it is properly connected to power and safety components are functioning correctly.

If you find an unusual problem during the test run, immediately stop the machine, disconnect it from power, and fix the problem BEFORE operating the machine again. The **Troubleshooting** table in the **SERVICE** section of this manual can help.

The Test Run consists of verifying the following:
1) The motor powers up and runs correctly, and
2) the emergency stop disabling mechanism works correctly.

**⚠WARNING**

**Serious injury or death can result from using this machine BEFORE understanding its controls and related safety information. DO NOT operate, or allow others to operate, machine until the information is understood.**

**⚠WARNING**

**DO NOT start machine until all preceding setup instructions have been performed. Operating an improperly set up machine may result in malfunction or unexpected results that can lead to serious injury, death, or machine/property damage.**

**To test run machine:**

1. Clear all setup tools away from machine.

2. Press Emergency Stop button in.

3. Connect machine to power by inserting power cord plug into a matching receptacle.

   **Note:** *The speed digital readout will not illuminate until **Step 4** is completed.*

4. Twist Emergency Stop button clockwise until it springs out (see **Figure 20**). This resets the switch so the machine can start.

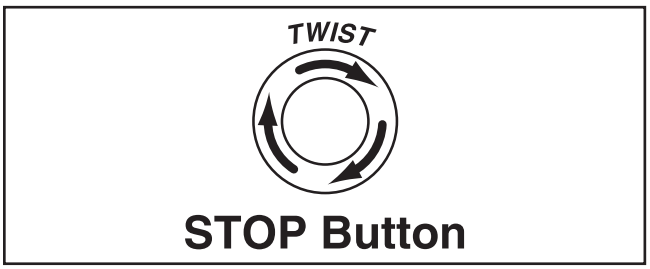


**Figure 20.** Resetting the switch.

5. Press green ON button (–) to turn machine ***ON***. Verify motor starts up and runs smoothly without any unusual problems or noises.

6. Adjust spindle speed throughout full speed range (see **Changing Spindle Speed** on **Page 22**).

7. Press Emergency Stop button to turn machine ***OFF***.

8. WITHOUT resetting Emergency Stop button, try to start machine by pressing the ON button. The machine should not start.

   — If the machine *does not* start, the safety feature of the Emergency Stop button is working correctly. Congratulations! The Test Run is complete.

   — If the machine *does* start, immediately turn it ***OFF*** and disconnect power. The safety feature of the Emergency Stop button is NOT working properly and must be replaced before further using the machine.

# SECTION 4: OPERATIONS

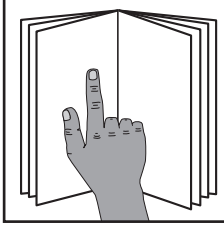

**⚠WARNING**

**To reduce your risk of serious injury, read this entire manual BEFORE using machine.**

**⚠WARNING**

**To reduce risk of eye or face injury from flying chips, always wear approved safety glasses and a face shield when operating this machine.**



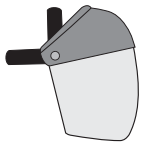

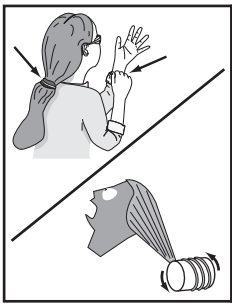

**⚠WARNING**

**Keep hair, clothing, and jewelry away from moving parts at all times. Entanglement can result in death, amputation, or severe crushing injuries!**

***NOTICE***

**If you are not experienced with this type of machine, WE STRONGLY RECOMMEND that you seek additional training outside of this manual. Read books/magazines or get formal training before beginning any projects. Regardless of the content in this section, Grizzly Industrial will not be held liable for accidents caused by lack of training.**

## Operation Overview

The purpose of this overview is to provide the novice machine operator with a basic understanding of how the machine is used during operation, so the machine controls/components discussed later in this manual are easier to understand.

Due to the generic nature of this overview, it is **not** intended to be an instructional guide. To learn more about specific operations, read this entire manual, seek additional training from experienced machine operators, and do additional research outside of this manual by reading "how-to" books, trade magazines, or websites.

**To complete a typical operation, the operator does the following:**

1. Examines workpiece to make sure it is suitable for drilling.
2. Puts on required safety glasses and face shield.
3. Firmly secures workpiece to table using a vise or T-slot clamps.
4. Installs correct drill bit for operation.
5. Adjusts table to correct height, then locks it in place.
6. Selects appropriate spindle speed according to drill bit speed chart located on **Page 21**.
7. Connects machine to power, and turns machine ***ON***.
8. Performs drilling operation.
9. When finished, turns machine ***OFF*** and disconnects it from power.

# Choosing Spindle Speeds

## Using Drill Bit Speed Chart

The chart shown in **Figure 21** is intended as a generic guide only. Always follow the manufacturer's speed recommendations if provided with your drill bits, cutters, or hole saws. Exceeding the recommended speeds may be dangerous to the operator.

The speeds shown here are intended to get you started. The optimum speed will always depend on various factors, including tool diameter, drilling pressure, material hardness, material quality, and desired finish.

Often, when drilling materials other than wood, some type of lubrication is necessary.

## Lubrication Suggestions

Wood .....None
Plastics .....Soapy Water
Brass .....Water-Based Lubricant
Aluminum..... Paraffin-Based Lubricant
Mild Steel..... Oil-Based Lubricant

**⚠CAUTION**

**Larger bits turning at slower speeds tend to grab workpiece aggressively. This can result in operator's hand being pulled into bit or workpiece being thrown with great force. Always clamp workpiece to table to prevent reduce risk of injury.**

| Twist/Brad Point Drill Bits | Soft Wood | Hard Wood | Plastic | Brass | Aluminum | Mild Steel |
|---|---|---|---|---|---|---|
| 1/16" – 3/16" | 3000 | 2500 | 2500 | 2500 | 3000 | 2500 |
| 13/64" – 3/8" | 2000 | 1500 | 2000 | 1250 | 2500 | 1250 |
| 25/64" – 5/8" | 1500 | 750 | 1500 | 750 | 1500 | 600 |
| 11/16" – 1" | 750 | 500 | 1000 | 400 | 1000 | 350 |

| Spade/Forstner Bits | Soft Wood | Hard Wood | Plastic | Brass | Aluminum | Mild Steel |
|---|---|---|---|---|---|---|
| 1/4" – 1/2" | 2000 | 1500 | | | | |
| 9/16" – 1" | 1500 | 1250 | | | | |
| 1-1/8" – 1-7/8" | 1000 | 750 | | | | |
| 2–3" | 500 | 350 | | | | |

| Hole Saws | Soft Wood | Hard Wood | Plastic | Brass | Aluminum | Mild Steel |
|---|---|---|---|---|---|---|
| 1/2" – 7/8" | 500 | 500 | 600 | 600 | 600 | 500 |
| 1" – 1-7/8" | 400 | 400 | 500 | 500 | 500 | 400 |
| 2" – 2-7/8" | 300 | 300 | 400 | 400 | 400 | 300 |
| 3" – 3-7/8" | 200 | 200 | 300 | 300 | 300 | 200 |
| 4" – 5" | 100 | 100 | 200 | 200 | 200 | 100 |

| Rosette Cutters | Soft Wood | Hard Wood | Plastic | Brass | Aluminum | Mild Steel |
|---|---|---|---|---|---|---|
| Carbide Insert Type | 350 | 250 | | | | |
| One-Piece Type | 1800 | 500 | | | | |

| Tenon/Plug Cutters | Soft Wood | Hard Wood | Plastic | Brass | Aluminum | Mild Steel |
|---|---|---|---|---|---|---|
| 3/8" – 1/2" | 1200 | 1000 | | | | |
| 5/8" – 1" | 800 | 600 | | | | |

**Figure 21.** Drill bit speed chart (RPMs).

# Changing Spindle Speed

The Model T31739 has a variable-speed spindle that operates between 400-2700 RPM. This speed range is achieved using an adjustable pulley system that is controlled by moving the spindle speed lever shown in **Figure 22**.

The digital readout on the front of the headstock displays the spindle RPM. Pull the spindle speed lever forward to increase spindle speed. Push the lever backward to decrease spindle speed.

**Note:** *Spindle speed can only be adjusted when the spindle is running.*

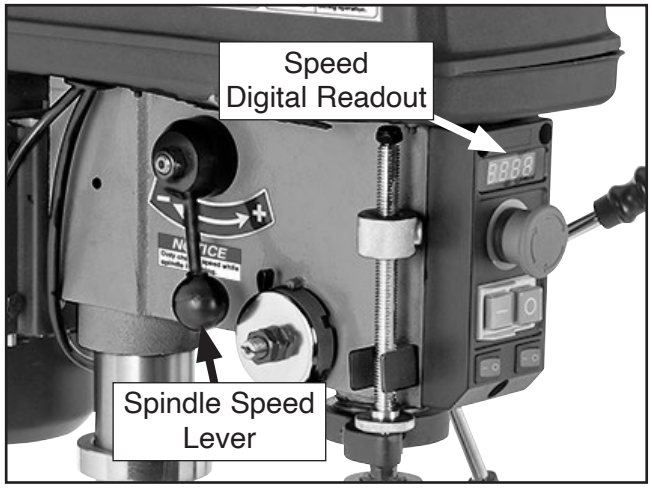


**Figure 22.** Spindle speed lever and DRO.

# Installing/Removing Chuck Arbor

Usually, once the chuck and arbor have been properly mounted together, they are considered semi-permanent connections. If you would like to install a different chuck, we recommend getting a new arbor for that chuck.

## Installing Drill Chuck and Arbor

1. DISCONNECT MACHINE FROM POWER!
2. Rotate chuck on arbor until chuck jaws retract into drill chuck body.
3. Slide arbor into spindle socket while slowly rotating chuck to line up tang on arbor with slot in socket (see **Figure 23**).

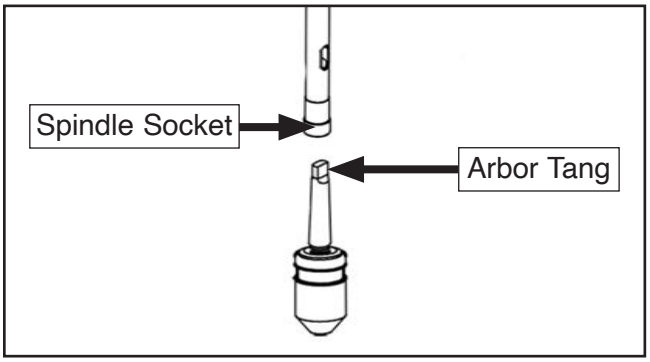


**Figure 23.** Spindle, arbor, and chuck.

4. Strike face of chuck from below with rubber-faced mallet to seat arbor in spindle.
5. Check seat by gently pulling down on chuck.

**Scan this code to see a video of the above process!**

## Removing Drill Chuck Arbor

The arbor can be removed to install other Morse Taper #2 tooling in the spindle. A drift key is included to help remove the arbor or other tooling from the spindle.

| Items Needed | Qty |
|---|---|
| Metal Hammer | 1 |
| Towel or Cloth | As Needed |

**To remove drill chuck arbor:**

1. DISCONNECT MACHINE FROM POWER!

2. Rotate downfeed handles until drift key slot is exposed in side of quill (see **Figure 24**).

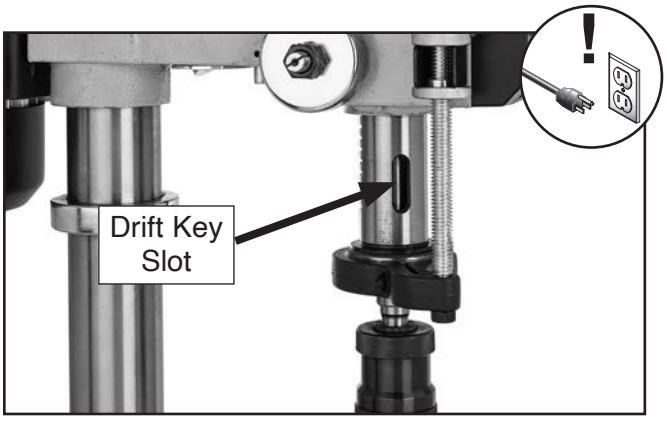


**Figure 24.** Drift key slot exposed.

3. Adjust feed return stop nut shown in **Figure 25** so it touches stop bracket. The quill should not return up into the head casting when depth stop is adjusted this way.

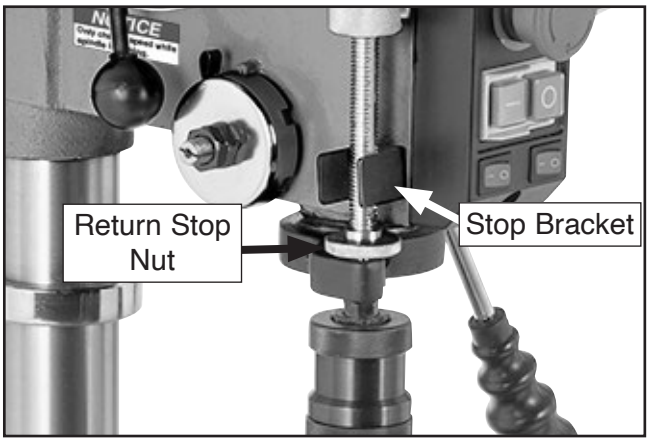


**Figure 25.** Feed return stop nut location.

4. Move table up until it is ¼" below bottom of chuck, and place a towel or cloth under the chuck.

5. Rotate spindle until inner drift key slot is aligned with outer slot (see **Figure 26**). You will see through the spindle when the slot is properly aligned.

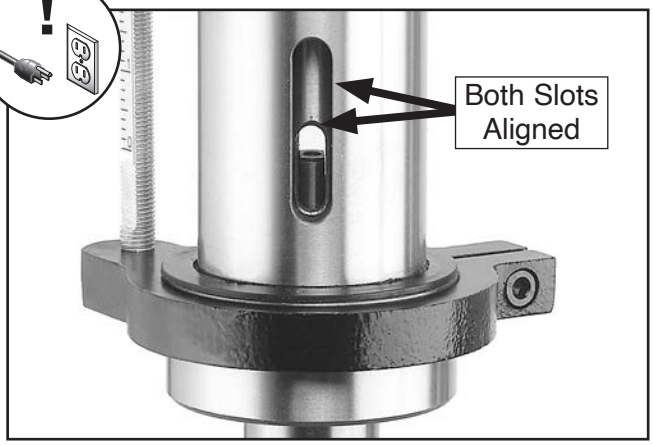


**Figure 26.** Inner and outer drift key slots aligned.

6. Insert drift key into drift key slot, and allow quill to rise, trapping drift key.

7. Tap drift key with a metal hammer (see **Figure 27**) until chuck releases.

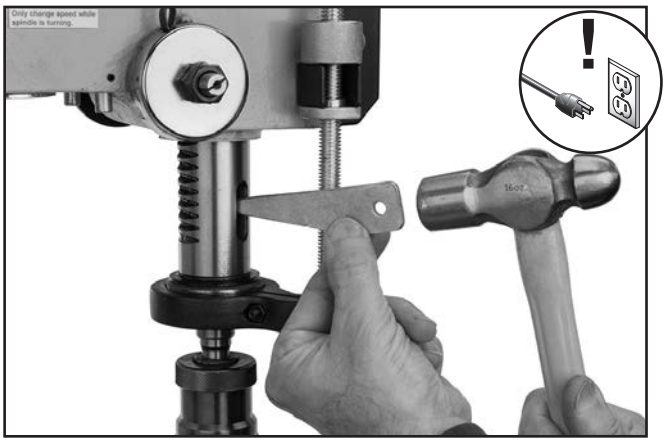

**Figure 27.** Using drift key to remove arbor from spindle.

8. Hold downfeed handle with one hand, and adjust feed return stop back to bottom of depth stop with the other hand.

9. Carefully retract the quill into the headstock.

# Installing/Removing Drill Bits

Any drill bit you install in the chuck must be tight enough that it will not come loose during operation. With a keyless chuck like the one that comes on the T31739, no chuck key is necessary for tightening or loosening.

## Installing a Drill Bit

1. DISCONNECT MACHINE FROM POWER!

2. Turn drill chuck counterclockwise on arbor to open jaws enough to accept shank of drill bit.

3. Insert drill bit as far as possible into chuck WITHOUT allowing chuck jaws to touch fluted portion of bit, and hand-tighten chuck clockwise as tightly as you can.

   **Note:** *Make sure small bits are not trapped between edges of two jaws; if they are, reinstall drill bit or it will not be secure enough to use for drilling.*

## Removing a Drill Bit

1. DISCONNECT MACHINE FROM POWER!

2. Turn chuck counterclockwise to open jaws and catch drill bit with a rag to protect hands.

# Using LED Worklight

Use light switch on front of headstock to turn on LED worklight. Worklight can be repositioned as necessary by pivoting it forward or backward.

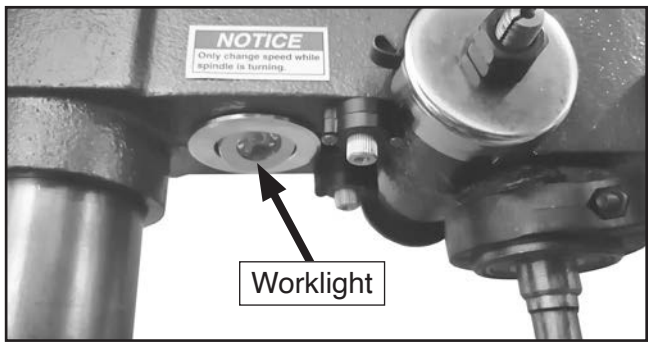


**Figure 28.** Location of LED worklight.

# Adjusting Depth Stop

The Model T31739 has a depth stop that allows you to drill repeat non-through holes to the same depth every time.

The depth stop consists of a stud attached to the quill with a depth nut that can be lowered or raised against a stop bracket to control drilling depth. **Figure 29** shows the various components of the depth stop.

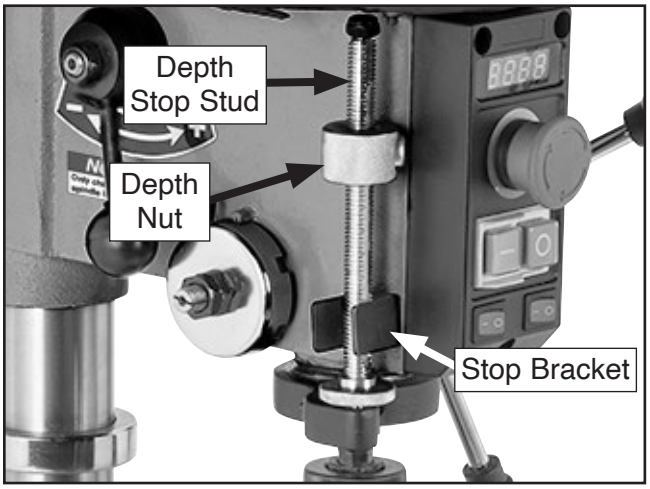


**Figure 29.** Depth stop components.

**To adjust depth stop:**

1. Lower drill bit to required height.

2. Thread depth nut down against stop bracket.

   **Note:** *The scale on the depth stop can be recalibrated if it gets moved or has changed from factory setting. Refer to* ***Calibrating Depth Stop*** *on* ***Page 32*** *for instructions on how this is done.*

# Positioning Table

The table moves vertically, rotates 360°, pivots around the column, and tilts 45° left or right. The support can also be extended to accommodate long workpieces.

## Rotating Table

1. Loosen pivot lock handle shown in **Figure 30**.

2. Rotate table to desired position, then re-tighten pivot lock handle.

## Raising/Lowering Table

1. Loosen table height lock handle shown in **Figure 30**.

2. Adjust table height by rotating table height crank handle (see **Figure 30**), then re-tighten table height lock handle.

## Pivoting Table Around Column

1. Loosen table height lock handle (see **Figure 30**).

2. Pivot table to desired location, making sure guide rack moves around column with table, as shown in **Figure 30**.

3. Retighten table height lock handle.

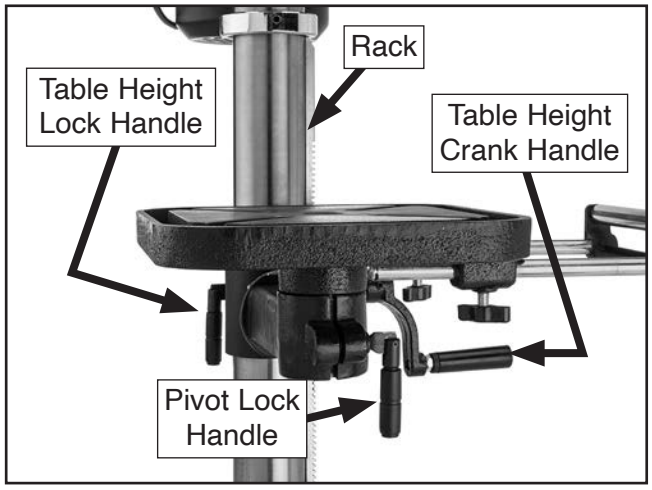


**Figure 30.** Table adjustment controls.

## Tilting Table

1. Loosen the lock bolt and set screw shown in **Figure 31**.

2. Tilt table until pointer aligns with desired angle on scale (see **Figure 31**).

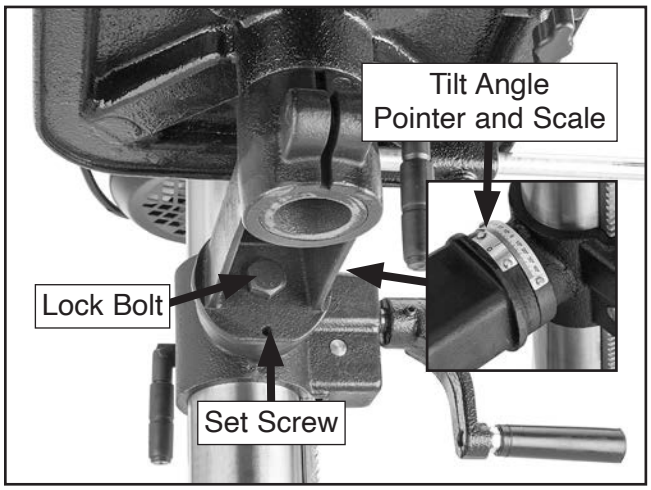


**Figure 31.** Table tilt controls.

3. Retighten set screw and lock bolt to secure table position.

## Adjusting Support Arm Extension

1. Loosen support arm extension locks (see **Figure 32**).

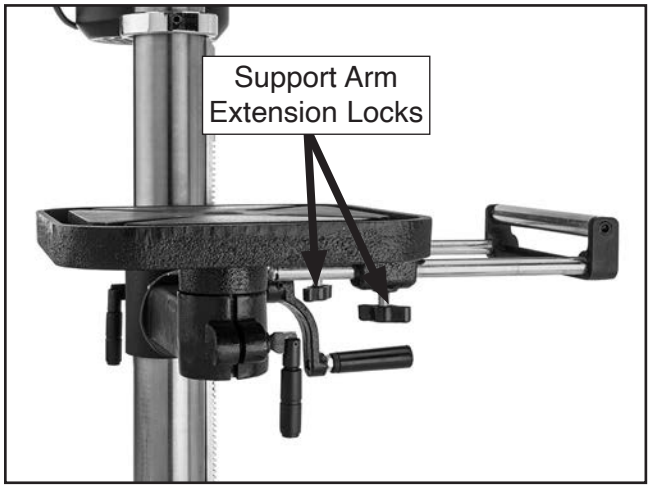


**Figure 32.** Support arm extension locks.

2. Adjust support arm to desired length.

3. Tighten support arm extension locks.

# Adjusting Laser

The crosshair lasers should be checked and adjusted for accuracy before starting a new project, raising or lowering the table, or changing workpiece thickness.

If a laser burns out, refer to **Replacing Lasers & Worklight** on **Page 33** to replace.

**⚠WARNING**

**DO NOT look directly into laser. Severe eye injury will result.**

| **Items Needed** | **Qty** |
|---|---|
| Phillips Head Screwdriver #1 | 1 |

**To adjust lasers:**

1. DISCONNECT MACHINE FROM POWER!

2. Install drill bit in chuck (see **Installing/ Removing Drill Bits** on **Page 24**).

3. Clamp workpiece to table.

4. Adjust table so workpiece is just below drill bit, then lock table in position.

5. Lower drill bit so it touches workpiece, making a slight indentation in the surface, then raise bit.

6. Connect drill press to power. Turn laser ***ON*** using switch on front of drill press (see **Figure 33**).

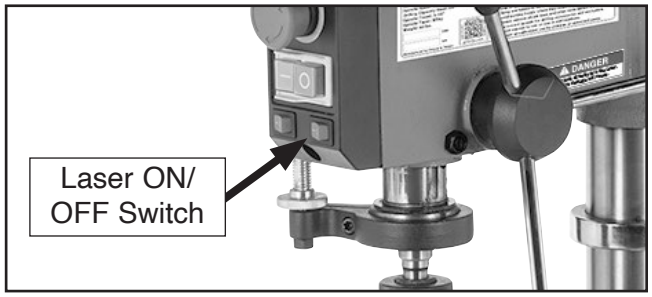


**Figure 33.** Location of laser ON/OFF switch.

7. Loosen (2) Phillips head screws securing each laser seat then adjust lasers by hand (**Figure 34**), positioning them so crosshairs align with indentation you made earlier in surface of workpiece (see **Figure 35**).

   — Turning each laser will adjust each crosshair line angle.

   — Adjusting laser position in seat will adjust crosshair line positions.

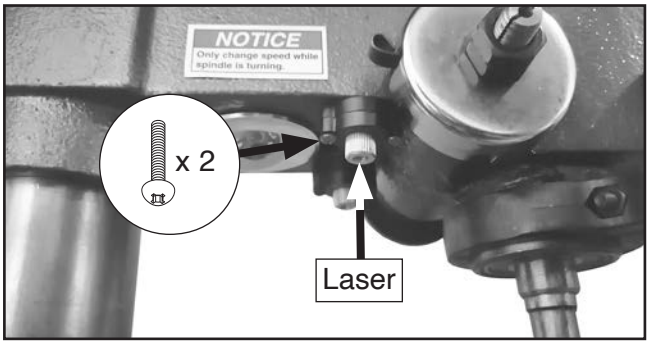


**Figure 34.** Laser adjustment components.

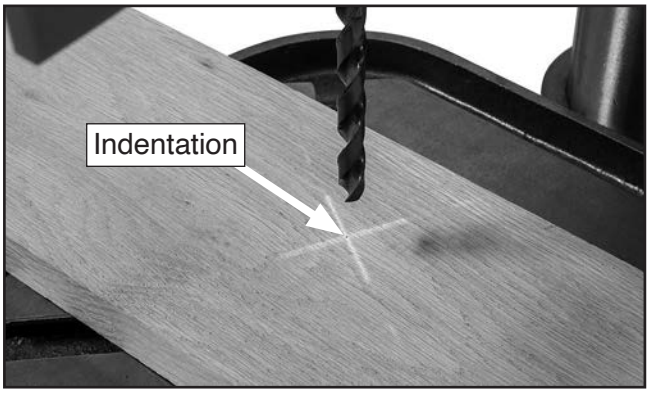


**Figure 35.** Crosshairs aligned with indentation on workpiece.

8. Once crosshairs are aligned with indentation in workpiece, tighten screws loosened in **Step 7** to secure laser positions.

# SECTION 5: ACCESSORIES

**⚠WARNING**

**Installing unapproved accessories may cause machine to malfunction, resulting in serious personal injury or machine damage. To reduce this risk, only install accessories recommended for this machine by Grizzly.**

***NOTICE***

**Refer to our website or latest catalog for additional recommended accessories.**

**T33682—Drill Press Tray**
This tray keeps all your drill press accessories ready to go at your fingertips, making projects more efficient and enjoyable. It will hold a 29-piece drill bit set in the embossed holes and has room for other accessories. Easy to install and use with mount clamps to attach to your drill press column.

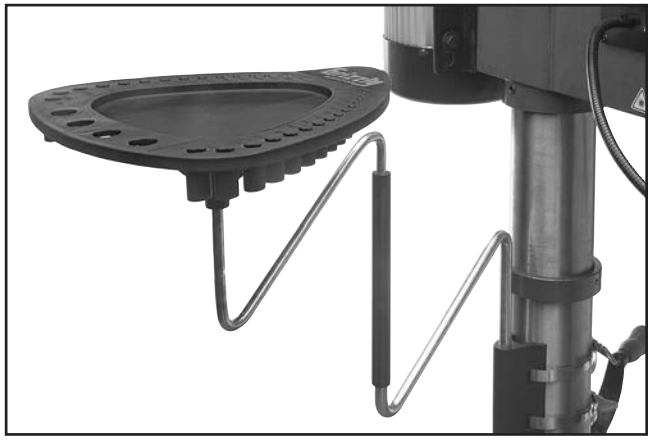

**Figure 36.** T33682 Drill Press Tray.

**T32710—Drill Press Table w/Flip-Stop Fence**
This table will increase your usable workspace. The 26" long fence features a T-slot with two adjustable flip stops and an easy-to-read scale with imperial measurements. Fence slides in 23¾" x 15¾" table embedded T-slots.




**Figure 37.** T32710 Drill Press Table w/Flip-Stop Fence.

**T30015—HSS M35 Cobalt 115-Pc. Drill Bit Set**
The bits in this 115-piece set all have 135° split points and fully ground flutes. Fractional sizes 1/16"–1/2" in increments of 1/64", letter bits from A–Z, and 60 number bits.

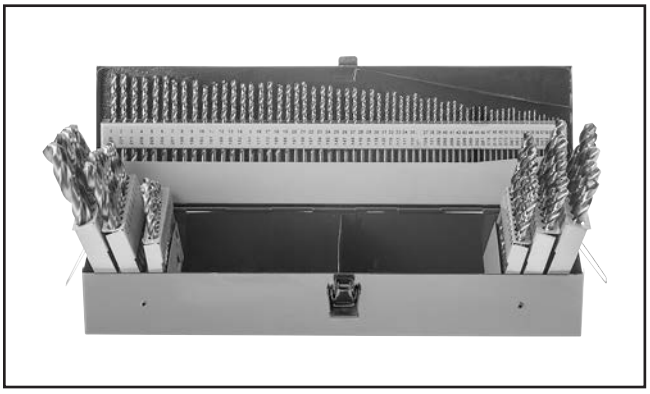

**Figure 38.** T30015 115-Pc. HSS M35 Cobalt Drill Bit Set.

# SECTION 6: MAINTENANCE

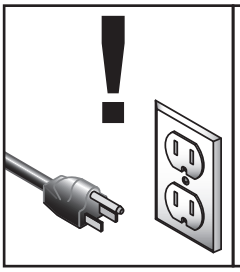

**⚠WARNING**

**To reduce risk of shock or accidental startup, always disconnect machine from power before adjustments, maintenance, or service.**

## Schedule

For optimum performance from this machine, this maintenance schedule must be strictly followed.

**Ongoing**

To minimize your risk of injury and maintain proper machine operation, shut down the machine immediately if you ever observe any of the items below, and fix the problem before continuing operations:

- Loose mounting bolts.
- Worn switches.
- Worn or damaged wires.
- Damaged V-belt.
- Any other unsafe condition.

**Monthly Check**

- V-belt tension, damage, or wear (**Page 32**).
- Clean/vacuum dust buildup off motor.

## Cleaning & Protecting

Cleaning the Model T31739 is relatively easy. Vacuum excess wood chips and sawdust, and wipe off the remaining dust with a dry cloth. If any resin has built up, use a resin dissolving cleaner to remove it.

Protect the unpainted cast-iron table by wiping it clean after every use—this ensures moisture from wood dust does not remain on bare metal surfaces. Keep the table rust-free with regular applications of products like those in **Figure 39**.

**G5562—SLIPIT® 1 Qt. Gel**
**G5563—SLIPIT® 11 Oz. Spray**




**Figure 39.** Recommended products for protecting unpainted cast-iron and steel.

## Lubrication

An essential part of lubrication is cleaning the components before lubricating them.

This step is critical because grime and chips build up on lubricated components, which makes them hard to move. Simply adding more lubricant will not result in smooth moving parts.

Clean components in this section before lubricating with recommended products like those shown in **Figure 40**.

DISCONNECT MACHINE FROM POWER BEFORE PERFORMING LUBRICATION.

**T23962—ISO 68 Moly-D Way Oil, 5 Gal.**
**T26419—Syn-O-Gen Synthetic Grease**




**Figure 40.** Recommended lubrication products.

## Quill & Column Surfaces

Oil Type .....Grizzly T23962 or ISO 68 Equivalent
Oil Amount.....Thin Coat
Lubrication Frequency.....8 Hrs. of Operation

Move the spindle all the way down to access the smooth surfaces of the quill. Adjust table height as necessary to access entire length of column (see **Figures 41–42**). Clean both with mineral spirits and shop rags.

**Note:** *Avoid removing the grease from the column and quill racks during cleaning.*

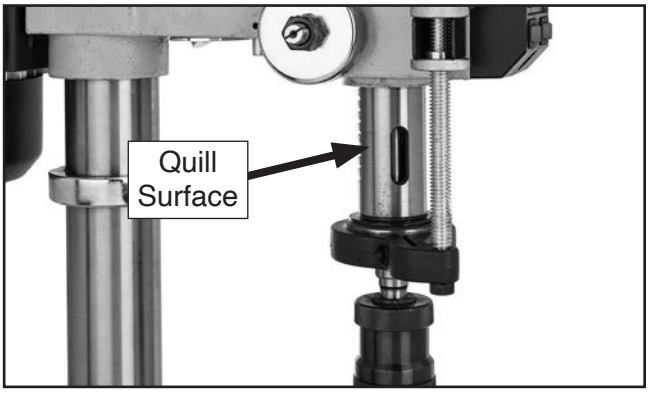


**Figure 41.** Quill surface.

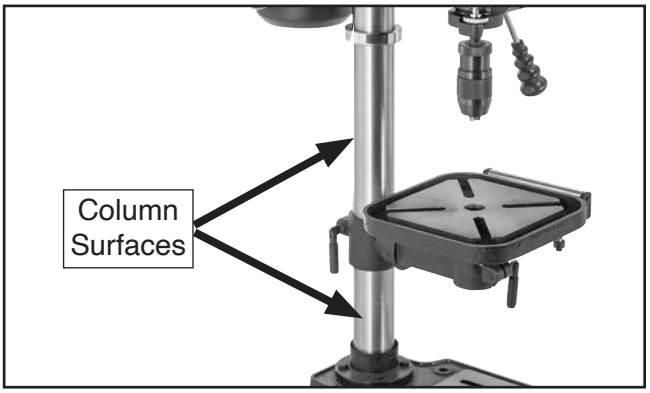


**Figure 42.** Column surface locations.

After cleaning, allow mineral spirits to dry, then apply a thin coat of oil to the surfaces.

## Column Rack, Quill Rack & Pinion

Grease Type.....Grizzly T26419 or NLGI#2 Equiv
Grease Amount .....Thin Coat
Lubrication Frequency.....90 hrs. of Operation

Move spindle all the way down to gain full access to quill rack (see **Figure 43**), then clean teeth with mineral spirits, shop rags, and a brush.

Clean the column rack teeth in a similar manner with mineral spirits, shop rags, and a brush.

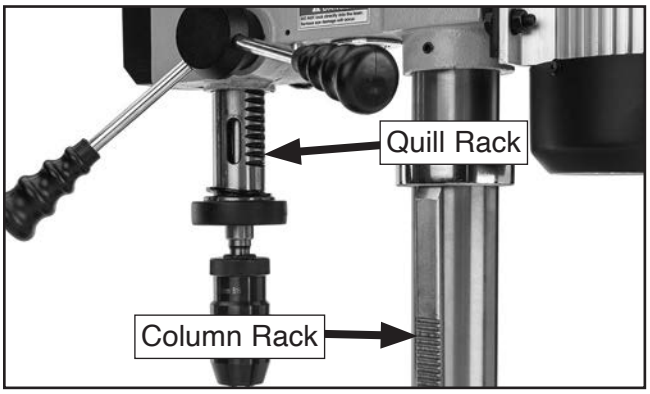


**Figure 43.** Quill and column rack locations.

After cleaning, allow mineral spirits to dry, then use a brush to apply a thin coat of grease to the rack teeth, then fully raise/lower quill and table to distribute grease.

**Note:** *Apply oil to the quill smooth outside surface that was removed during the cleaning process.*

## Support Arm Extension Rods

Oil Type .....Grizzly T23962 or ISO 68 Equivalent
Oil Amount.....Thin Coat
Lubrication Frequency..... As Needed

Clean support arm extension rods (see **Figure 44**) with mineral spirits and a shop rag.

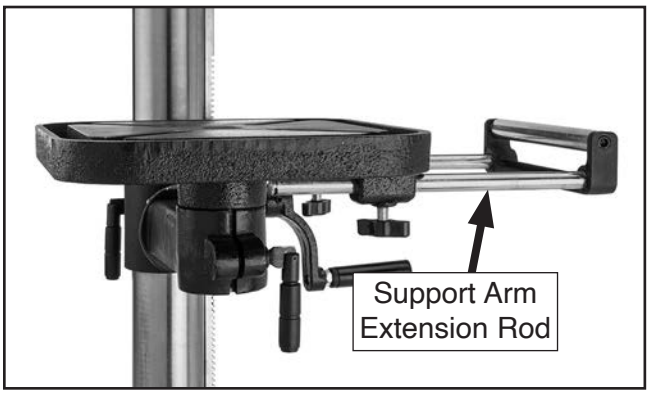


**Figure 44.** Support arm rod location.

After cleaning, allow mineral spirits to dry, then apply a thin coat of oil to the rods. Move support arm in and out to distribute lubricant.

# SECTION 7: SERVICE

Review the troubleshooting procedures in this section if a problem develops with your machine. If you need replacement parts or additional help with a procedure, call our Technical Support. **Note:** *Please gather the serial number and manufacture date of your machine before calling.*

## Troubleshooting

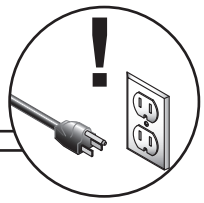

### Motor & Electrical

| Symptom | Possible Cause | Possible Solution |
|---|---|---|
| Machine does not start, or power supply fuse/breaker trips immediately after startup. | 1. E-Stop Button depressed/at fault.<br>2. Incorrect power supply voltage or circuit size.<br>3. Power supply circuit breaker tripped or fuse blown.<br>4. Start capacitor at fault.<br>5. Wiring broken, disconnected, or corroded.<br>6. ON/OFF buttons at fault.<br>7. Motor at fault. | 1. Rotate E-Stop Button head to reset. Replace if at fault.<br>2. Ensure correct power supply voltage and circuit size (**Page 10**).<br>3. Ensure circuit is sized correctly and free of shorts. Reset circuit breaker or replace fuse.<br>4. Test/replace if at fault.<br>5. Fix broken wires or disconnected/corroded connections (**Page 36**).<br>6. Replace.<br>7. Test/repair/replace. |
| Machine stalls or is underpowered. | 1. Incorrect bit/cutter for task.<br>2. Feed rate/cutting speed too fast.<br>3. Dull bit/cutter.<br>4. Belt slipping.<br>5. Machine undersized for task.<br>6. Motor overheated.<br>7. Pulley slipping on shaft.<br>8. Motor at fault. | 1. Use correct bit/cutter for task.<br>2. Decrease feed rate/cutting speed (**Page 22**).<br>3. Sharpen bit/cutter or replace.<br>4. Ensure belt is oil free, tension/replace belt (**Page 32**).<br>5. Use correct cutter/bit; reduce feed rate; reduce spindle RPM; use cutting fluid if possible.<br>6. Clean motor/let cool, and reduce workload.<br>7. Tighten loose pulley; replace broken/missing parts.<br>8. Test/repair/replace. |
| Machine has vibration or noisy operation. | 1. Motor or component loose.<br>2. V-belt worn.<br>3. Incorrectly mounted to workbench.<br>4. Motor mount loose/broken.<br>5. Spindle loose, improperly installed or damaged.<br>6. Workpiece loose.<br>7. Motor fan rubbing on fan cover.<br>8. Spindle bearings at fault.<br>9. Chuck or cutter at fault.<br>10. Motor bearings at fault. | 1. Replace damaged or missing bolts/nuts or tighten if loose.<br>2. Inspect/replace belt (**Page 32**).<br>3. Shim or tighten mounting hardware (**Page 16**).<br>4. Tighten/replace.<br>5. Tighten loose spindle, install spindle with clean mating surfaces, replace spindle if damaged.<br>6. Use the correct holding fixture for workpiece.<br>7. Fix/replace fan cover; replace loose/damaged fan.<br>8. Test by rotating spindle; rotational grinding/loose shaft requires bearing replacement.<br>9. Replace out-of-round chuck, dull, or bent cutter.<br>10. Test by rotating shaft; rotational grinding/loose shaft requires bearing replacement. |

## Drill Press Operations

| Symptom | Possible Cause | Possible Solution |
|---|---|---|
| Tool falls out/loose in spindle/chuck. | 1. Tool loose or incorrectly installed.<br>2. Debris on tool or in spindle taper.<br>3. Excessive feed pressure. | 1. Remove and re-install (**Page 24**).<br>2. Clean tool and spindle taper, then re-install.<br>3. Decrease feed pressure and allow chips to clear. |
| Breaking tools or cutters. | 1. Spindle speed/feed rate too fast.<br>2. Taking too big of cut at one time.<br>3. Improper cutting technique or type of cut.<br>4. Cutting tool getting too hot.<br>5. Spindle extended too far down while drilling. | 1. Reduce spindle speed; reduce feed rate.<br>2. Decrease feed pressure and allow chips to clear.<br>3. Use right technique, tool, or machine for job.<br>4. Use coolant or oil for appropriate application (**Page 21**); reduce cutting speed (**Page 22**).<br>5. Retract spindle and raise table to increase rigidity. |
| Workpiece or tool vibrates or chatters during operation. | 1. Spindle extended too far down while drilling.<br>2. Table locks not tight.<br>3. Workpiece not secure.<br>4. Spindle speed/feed rate too fast. | 1. Retract spindle and raise table to increase rigidity.<br>2. Tighten table locks (**Page 25**).<br>3. Properly clamp workpiece on table or in vise.<br>4. Reduce spindle speed (**Page 22**); reduce feed rate. |
| Table hard to move. | 1. Table locked.<br>2. Dirty or dry rack and pinion. | 1. Disengage table locks (**Page 25**).<br>2. Clean away chips/debris. Lubricate rack and pinion. |
| Spindle overheats. | 1. Drill press operated too long at high speeds. | 1. Allow drill press to cool. Avoid operating at high speeds for extended time. |
| Spindle does not fully retract. | 1. Poorly adjusted/worn return spring.<br>2. Debris on spindle/quill rack. | 1. Replace/increase return spring tension (**Page 35**).<br>2. Clean and lubricate spindle/quill rack. |
| Drill bit drifts. | 1. Dull/incorrectly sharpened drill bit.<br>2. Tool/bit/chuck incorrectly installed. | 1. Correctly sharpen drill bit.<br>2. Correctly install tool/bit/chuck. |
| Drill bit stuck in workpiece. | 1. Workpiece loose.<br>2. Lack of proper lubrication for workpiece material.<br>3. Bit/cutting tool loose in chuck.<br>4. Spindle speed/feed rate too slow/fast. | 1. Properly clamp workpiece.<br>2. Use appropriate lubrication for application (**Page 21**).<br>3. Remove and re-install (**Page 24**).<br>4. Adjust spindle speed (**Page 22**); feed rate. |
| Workpiece thrown from table. | 1. Workpiece not secure; bit too large for feed speed. | 1. Properly clamp workpiece on table or in vise; decrease feed speed. |
| Excessive runout or wobbling in chuck/ drill bit. | 1. Debris between chuck-to-spindle mating surface.<br>2. Tool/bit bent or installed incorrectly.<br>3. Spindle bearings worn. | 1. Remove chuck, clean, deburr tapered chuck and spindle mating surfaces, reassemble.<br>2. Install tool/bit correctly or replace (**Page 25**).<br>3. Replace spindle bearings. |
| Depth stop inaccurate. | 1. Depth stop not calibrated. | 1. Calibrate depth stop (**Page 32**). |
| Backside of workpiece splinters. | 1. Scrap board not installed between table and workpiece. | 1. Install scrap board between table and workpiece. |
| Speed DRO display is incorrect. | 1. Speed sensor catching on pulley/at fault.<br>2. DRO circuit board wiring broken, disconnected, or corroded. | 1. Adjust position/replace if at fault.<br>2. Fix broken wires or disconnected/corroded wiring connections (**Page 36**). |
| Laser or LED does not work. | 1. Lens covered with dust.<br>2. Wires disconnected or damaged.<br>3. Laser/LED ON/OFF switch at fault.<br>4. Laser/LED damaged/at fault.<br>5. Circuit board at fault. | 1. Clean lens.<br>2. Check for proper connections or replace (**Page 36**).<br>3. Replace switch.<br>4. Replace laser/LED (**Page 33**).<br>5. Replace circuit board. |

# V-Belt Tension & Replacement

The V-belt transfers power from the motor to the spindle. If the V-belt does not have the proper tension or is damaged or contaminated with oil/grease, the drill press will not operate with full power. Regularly check V-belt tension and replace the belt when necessary. **Figure 45** shows the V-belt tension components.

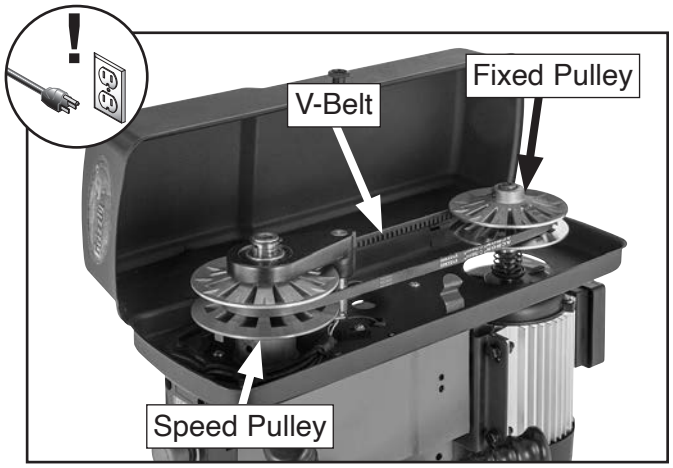


**Figure 45.** V-belt tension components.

**To replace V-belt:**

1. DISCONNECT MACHINE FROM POWER!
2. Adjust spindle speed lever fully forward to highest speed setting (see **Figure 46**) to release belt tension.

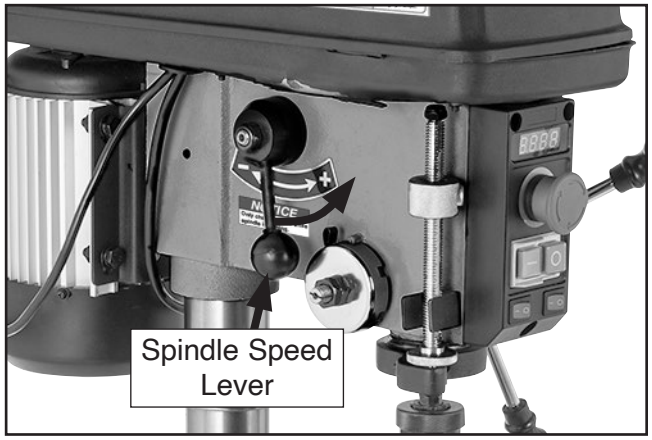


**Figure 46.** Spindle speed lever location.

3. Open belt cover.
4. Remove old belt and install a new one.
5. Close belt cover and connect machine to power.
6. To re-tension belt, turn spindle rotation ***ON***, and adjust spindle speed lever to lowest speed setting.

   **Note:** *Belt tension cannot be reapplied without spindle turning.*

# Calibrating Depth Stop

The depth stop allows you to drill multiple holes at the same depth. The scale on this depth stop can be calibrated if it ever becomes incorrect.

**To calibrate depth stop:**

1. Loosen return stop nut and calibration nut shown in **Figure 47**.

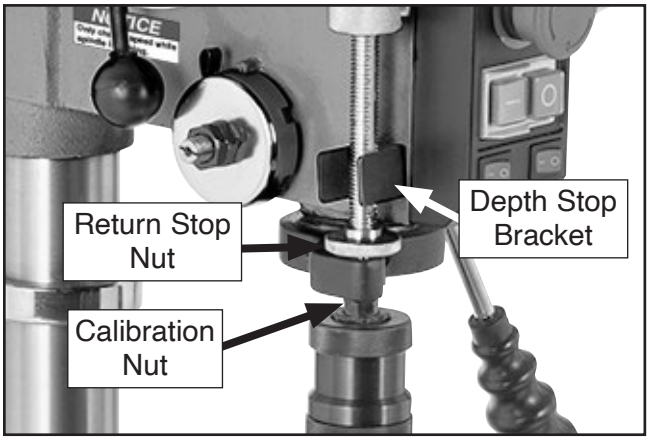


**Figure 47.** Calibration components.

2. Use calibration nut to zero depth stop scale with depth stop bracket.
3. Hold depth stop at zero, and tighten return stop nut to hold depth stop in position.
4. Test depth stop by measuring how far spindle moves with respect to where you set depth stop.

# Replacing Lasers & LED Worklight

If either one of the lasers or the LED bulb in the worklight burn out and need to be replaced, they must be rewired. A wiring diagram is provided on **Page 36** for your reference.

**Items Needed** **Qty**
Phillips Head Screwdriver #1, #2.....1 Ea.
New Laser & Cord (#PT31739067) ..... 1

## Replacing Laser

**1.** DISCONNECT MACHINE FROM POWER!

**2.** Remove (2) Phillips head screws securing burned out laser in laser seat (see **Figure 48**).

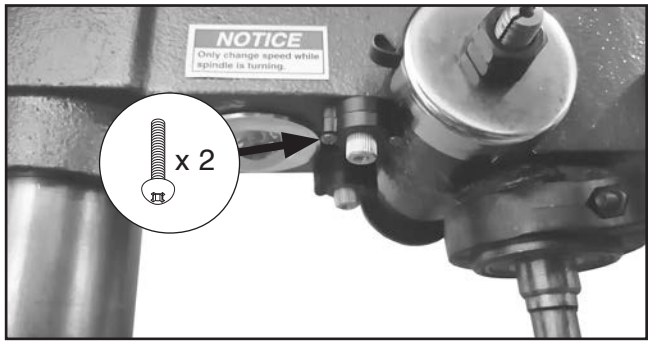


**Figure 48.** Location of Phillips head screws securing laser.

**3.** Open belt cover and identify which cord is connected to laser by lightly tugging cords fed into headstock (see **Figure 49**).

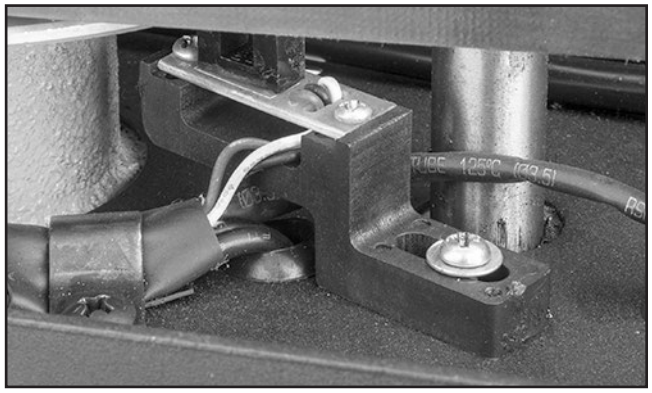

**Figure 49.** Worklight and laser cords fed into headstock.

**4.** Remove control panel cover. Find where laser cord wires connect to laser switch and crimp wire connector (see **Figure 50**).

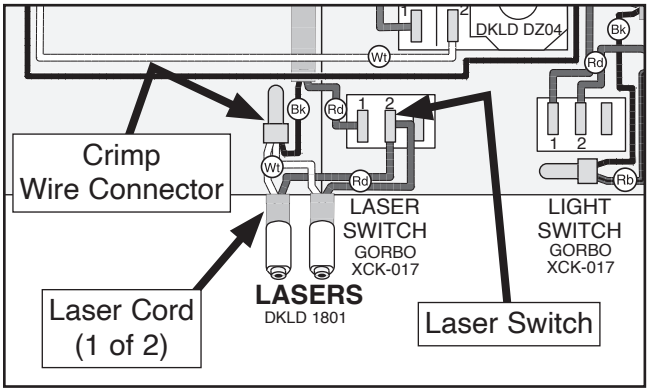


**Figure 50.** Laser wiring.

**5**. Remove burned out laser wires from their their connections on laser switch and in crimp wire connector, then remove laser from headstock, pulling wires with it.

**6**. Insert new laser wires up through hole in headstock, through belt cover, and attach wires to laser switch and crimp wire connector as they were connected in **Step 4**.

**7**. Replace control panel cover and close belt cover.

**8**. Refer to **Adjusting Laser** on **Page 26** to secure and adjust laser.

## Replacing Worklight

**Items Needed** **Qty**
Phillips Head Screwdriver #2 .....1 Ea.
New Worklight & Cord (#PT31739066) ..... 1

**To replace worklight:**

**1.** DISCONNECT MACHINE FROM POWER!

**2.** Grip and pull worklight down through headstock hole to reveal spring clamps (see **Figure 51**). Quarter-turn the worklight to release clamps and worklight.

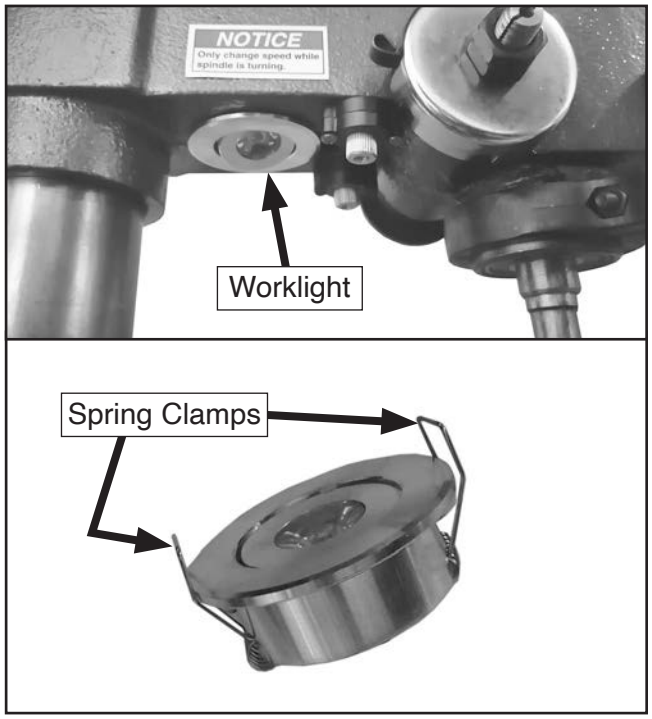


**Figure 51.** Worklight position and clamps.

**3.** Open belt cover and identify which cord is connected to worklight by lightly tugging cords fed into headstock (see **Figure 52**).

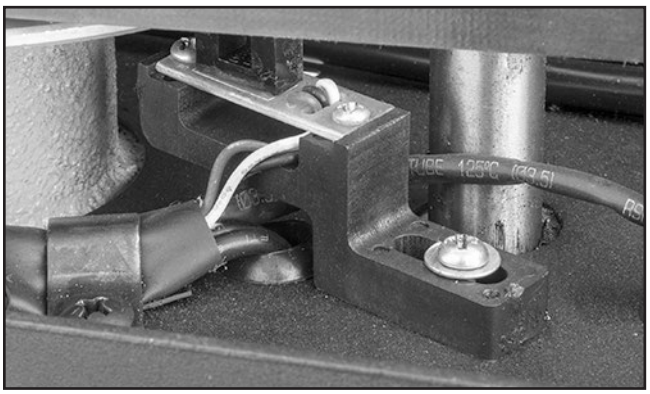

**Figure 52.** Cords fed into headstock.

**4**. Remove control panel cover. Find where worklight cord wires connect to worklight switch and crimp wire connector (see **Figure 53**).

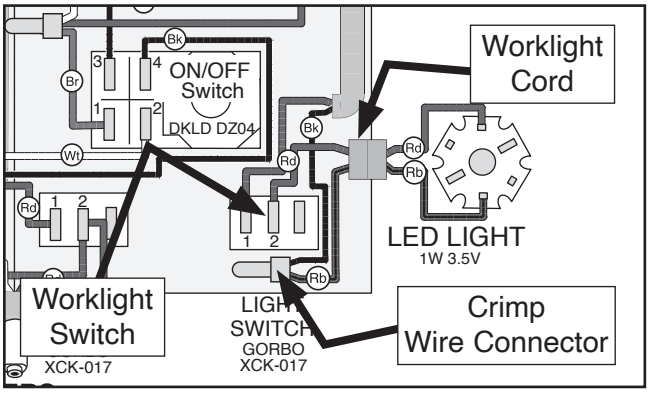


**Figure 53.** Worklight wiring.

**5**. Replace old worklight wires with new worklight wires, and feed new worklight back through headstock and worklight hole.

**6**. Replace control panel cover and close belt cover.

**7**. Use spring clamps to secure worklight in position.

# Adjusting Spring Tension

The spring tension for automatic quill recoil has been pre-set at the factory. In most cases, it will never need to be re-adjusted during life of the machine. However, if quill stops automatically recoiling, the spring may need to be adjusted for additional tension. If it does need adjustment, the spring housing is located on the left side of the headstock.

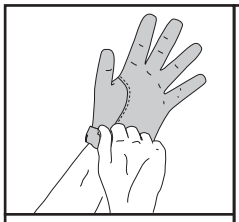

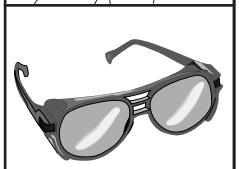

**⚠WARNING**

**If the return spring should come loose from the spring cap and rapidly unwind, laceration or impact injuries could occur. Always wear heavy leather gloves and safety glasses when adjusting the return spring tension.**

| Items Needed | Qty |
|---|---|
| Heavy Leather Gloves | 1 Pair |
| Safety Glasses | 1 Pair |
| Shop Rags | As Needed |
| Open-End Wrench 19mm | 1 |

**To adjust spring tension:**

1. DISCONNECT MACHINE FROM POWER!

2. PUT ON SAFETY GLASSES!

3. Wipe any oil off spring lock cover so it does not slip in your fingers when you hold the cover from spinning (see **Figure 55**).

4. Hold spring lock cover against side of headstock so the cover stays splined with locking lug, as shown in **Figure 55**, then loosen jam nut and loosen cover nut approximately ¼" each.

   **IMPORTANT:** Hold spring cover tightly during **Step 5**, or force of spring will cause cover to spin out of your hands.

5. Wearing gloves, pull spring cover (see **Figure 55**) outward just enough to disengage spring-cover lock slot from locking lug.

6. Rotate cover counterclockwise to increase tension, or let cover slowly unwind in clockwise direction to reduce spring tension (see **Figure 54**).

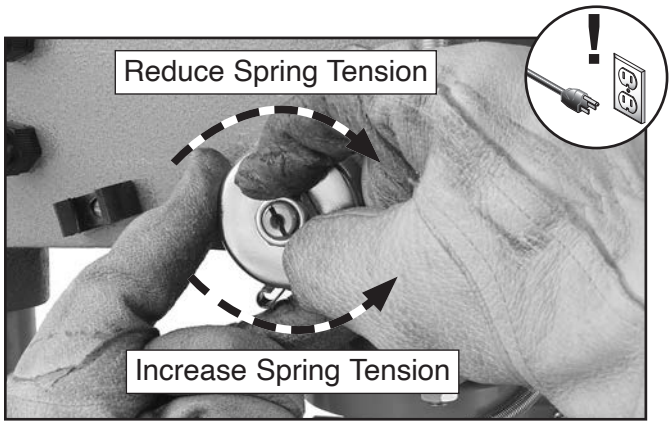


**Figure 54.** Example of adjusting cover.

7. Engage next available spring-cover lock slot with locking lug (see **Figure 55**) and hold spring lock cover tightly to side of headstock.

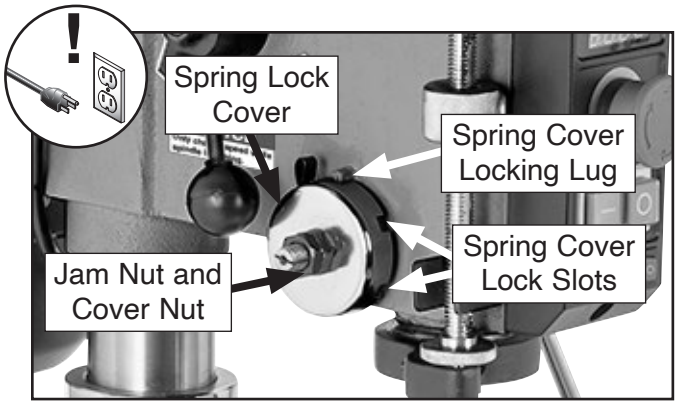


**Figure 55.** Spindle return spring assembly.

8. Tighten cover nut against spring cover just until nut stops, and then back off nut approximately ⅓ turn.

9. Hold cover nut and tighten jam nut to cover nut.

10. Check return spring tensioning by downfeeding spindle. Spindle should return quickly when downward pressure is released.

    — If spindle does not retract quickly, repeat **Steps 4–9**, and re-check tension until return speed is adequate.

# SECTION 8: WIRING

These pages are current at the time of printing. However, in the spirit of improvement, we may make changes to the electrical systems of future machines. Compare the manufacture date of your machine to the one stated in this manual, and study this section carefully.

If there are differences between your machine and what is shown in this section, call Technical Support at (570) 546-9663 for assistance BEFORE making any changes to the wiring on your machine. An updated wiring diagram may be available. **Note:** *Please gather the serial number and manufacture date of your machine before calling. This information can be found on the main machine label.*

## ⚠WARNING
## Wiring Safety Instructions

**SHOCK HAZARD.** Working on wiring that is connected to a power source is extremely dangerous. Touching electrified parts will result in personal injury including but not limited to severe burns, electrocution, or death. Disconnect the power from the machine before servicing electrical components!

**MODIFICATIONS.** Modifying the wiring beyond what is shown in the diagram may lead to unpredictable results, including serious injury or fire. This includes the installation of unapproved aftermarket parts.

**WIRE CONNECTIONS.** All connections must be tight to prevent wires from loosening during machine operation. Double-check all wires disconnected or connected during any wiring task to ensure tight connections.

**CIRCUIT REQUIREMENTS**. You MUST follow the requirements at the beginning of this manual when connecting your machine to a power source.

**WIRE/COMPONENT DAMAGE.** Damaged wires or components increase the risk of serious personal injury, fire, or machine damage. If you notice that any wires or components are damaged while performing a wiring task, replace those wires or components.

**MOTOR WIRING.** The motor wiring shown in these diagrams is current at the time of printing but may not match your machine. If you find this to be the case, use the wiring diagram inside the motor junction box.

**CAPACITORS/INVERTERS.** Some capacitors and power inverters store an electrical charge for up to 10 minutes after being disconnected from the power source. To reduce the risk of being shocked, wait at least this long before working on capacitors.

**EXPERIENCING DIFFICULTIES.** If you are experiencing difficulties understanding the information included in this section, contact our Technical Support at (570) 546-9663.

**NOTICE**

**The photos and diagrams included in this section are best viewed in color. You can view these pages in color at www.grizzly.com.**

**COLOR KEY**

| | | | | | | | |
|---|---|---|---|---|---|---|---|
| BLACK | Bk | BLUE | Bl | YELLOW | Yl | LIGHT BLUE | Lb |
| WHITE | Wt | BROWN | Br | YELLOW GREEN | Yg | BLUE WHITE | Bw |
| GREEN | Gn | GRAY | Gy | RED BLACK | Rb | TURQUOISE | Tu |
| RED | Rd | ORANGE | Or | PINK | Pk | | |

# Wiring Diagram

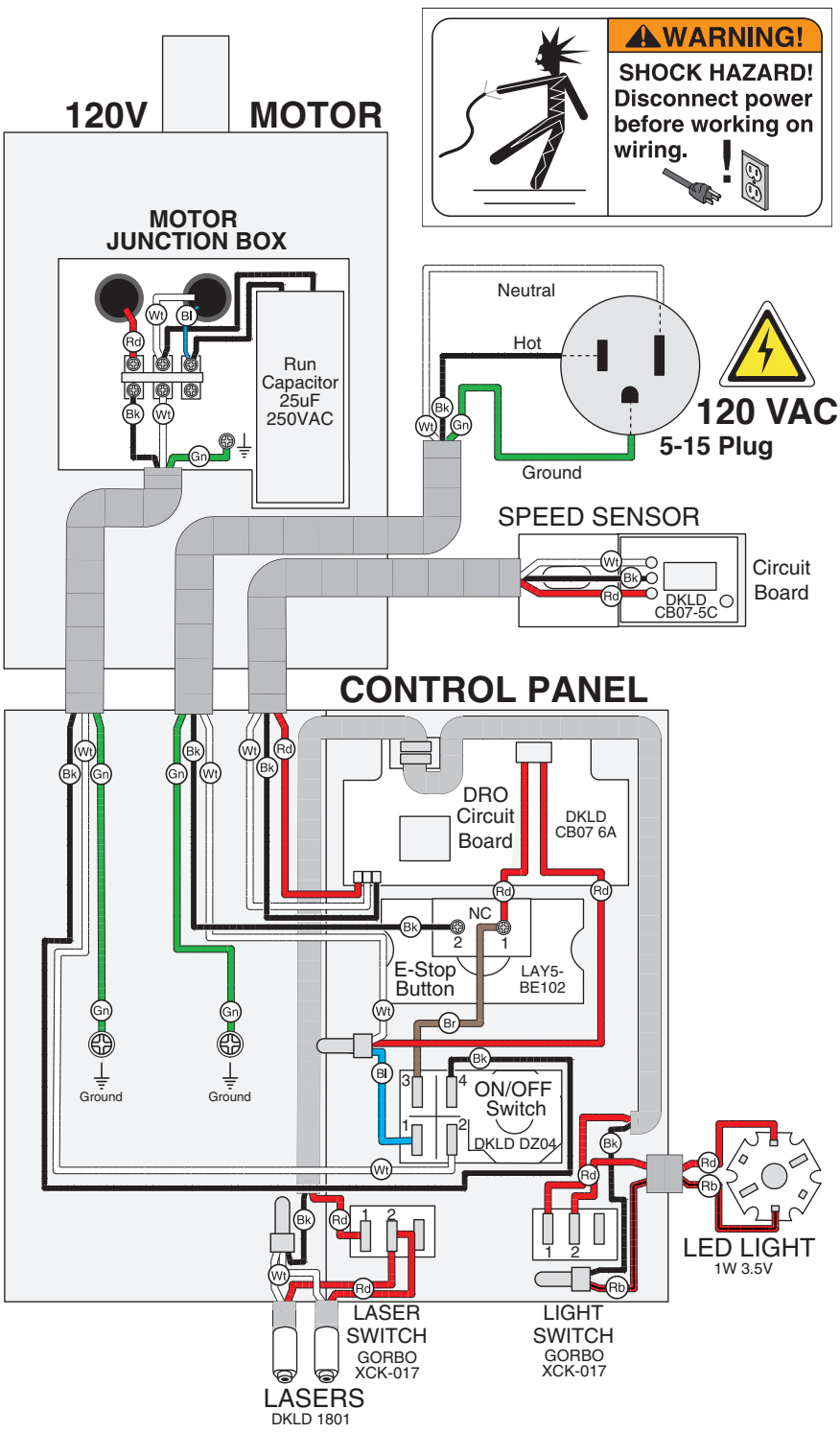


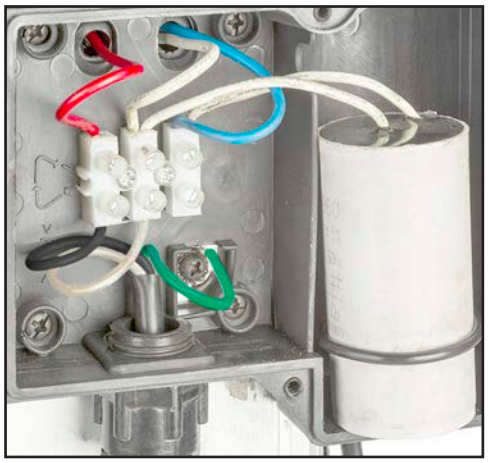

**Figure 56.** Motor junction box wiring.

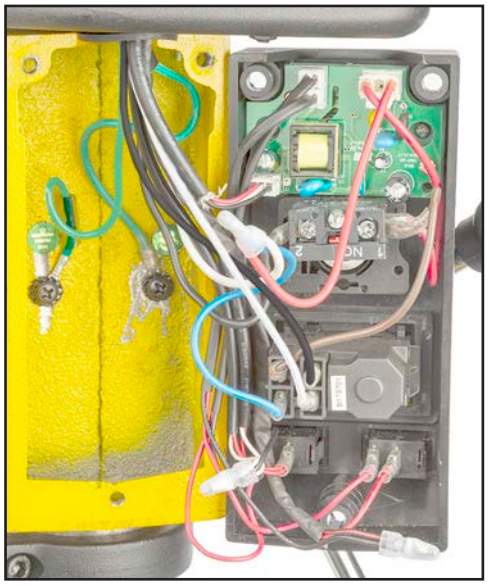

**Figure 57.** Control panel wiring.




**Figure 58.** Speed sensor.

# SECTION 9: PARTS

We do our best to stock replacement parts when possible, but we cannot guarantee that all parts shown are available for purchase. Call **(800) 523-4777** or visit **www.grizzly.com/parts** to check for availability.

## Main

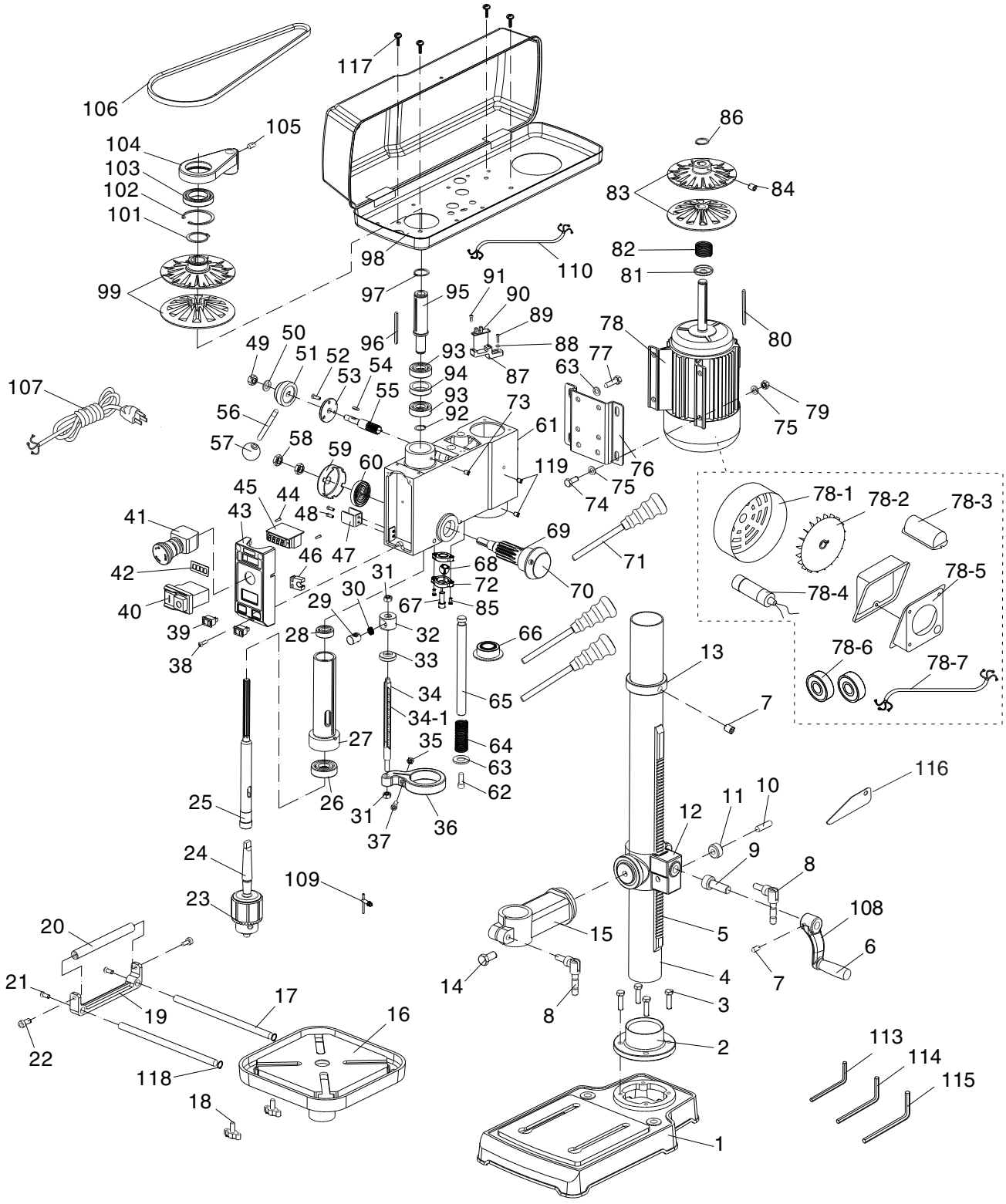




**BUY PARTS ONLINE AT GRIZZLY.COM!**
Scan QR code to visit our Parts Store.

# Main Parts List

| REF | PART # | DESCRIPTION |
|---|---|---|
| 1 | PT31739001 | BASE |
| 2 | PT31739002 | COLUMN SEAT |
| 3 | PT31739003 | HEX BOLT M8-1.25 X 20 |
| 4 | PT31739004 | COLUMN |
| 5 | PT31739005 | RACK |
| 6 | PT31739006 | REVOLVING HANDLE 20 X 75, M10-1.5 X 10 |
| 7 | PT31739007 | SET SCREW M6-1 X 10 |
| 8 | PT31739008 | LOCK HANDLE 15 X 78, M10-1.5 X 25 |
| 9 | PT31739009 | WORM SHAFT |
| 10 | PT31739010 | WORM GEAR PIN |
| 11 | PT31739011 | WORM GEAR |
| 12 | PT31739012 | WORM GEAR HOUSING |
| 13 | PT31739013 | COLUMN RING |
| 14 | PT31739014 | HEX BOLT M12-1.75 X 25 |
| 15 | PT31739015 | TABLE MOUNTING ARM |
| 16 | PT31739016 | TABLE |
| 17 | PT31739017 | EXTENSION ROD 1/2" X 8-3/4" |
| 18 | PT31739018 | KNOB BOLT M8-1.25 X 18, D36, WING |
| 19 | PT31739019 | EXTENSION ROLLER BRACKET |
| 20 | PT31739020 | EXTENSION ROLLER |
| 21 | PT31739021 | FLAT HD CAP SCR M6-1 X 12 |
| 22 | PT31739022 | CAP SCREW M10-1.5 X 20 |
| 23 | PT31739023 | DRILL CHUCK JT3 X 1/32"-5/8" KEYLESS |
| 24 | PT31739024 | DRILL CHUCK ARBOR 5/8" |
| 25 | PT31739025 | SPINDLE |
| 26 | PT31739026 | BALL BEARING 6204ZZ |
| 27 | PT31739027 | QUILL |
| 28 | PT31739028 | BALL BEARING 6201ZZ |
| 29 | PT31739029 | CLAMP BOLT M12-1.75 X 2 |
| 30 | PT31739030 | COMPRESSION SPRING 1.2 X 6 |
| 31 | PT31739031 | LOCK NUT M8-1.25 |
| 32 | PT31739032 | QUICK-RELEASE DEPTH STOP |
| 33 | PT31739033 | DEPTH STOP SUPPORT NUT |
| 34 | PT31739034 | THREADED DEPTH ROD |
| 34-1 | PT31739034-1 | DEPTH STOP GAUGE |
| 35 | PT31739035 | HEX NUT M6-1 |
| 36 | PT31739036 | DEPTH STOP BRACKET |
| 37 | PT31739037 | CAP SCREW M6-1 X 25 |
| 38 | PT31739038 | PHLP HD SCR M5-.8 X 16 |
| 39 | PT31739039 | ROCKER SWITCH GORBO XCK-017 10(4)A 250V |
| 40 | PT31739040 | MAG ON/OFF SWITCH DKLD DZ04 10A 120V |
| 41 | PT31739041 | E-STOP BUTTON LAY5-BE102 10(6)A 400V |
| 42 | PT31739042 | DISPLAY SCREEN COVER |
| 43 | PT31739043 | SWITCH BOX |
| 44 | PT31739044 | TAP SCREW M3 X 8 |
| 45 | PT31739045 | DIGITAL DISPLAY DKLD CB07-6A |
| 46 | PT31739046 | CHUCK KEY HOLDER |
| 47 | PT31739047 | DEPTH STOP BRACKET |
| 48 | PT31739048 | PHLP HD SCR M5-.8 X 12 |
| 49 | PT31739049 | LOCK NUT M10-1.5 |
| 50 | PT31739050 | FLAT WASHER 10MM |
| 51 | PT31739051 | SPEED HANDLE HUB |
| 52 | PT31739052 | FLAT HD SCR M5-.8 X 16 |
| 53 | PT31739053 | SPEED ADJUST PLATE |
| 54 | PT31739054 | KEY 4 X 4 X 12 SE |
| 55 | PT31739055 | SPEED CONTROL GEAR |
| 56 | PT31739056 | SPEED CONTROL KNOB SHAFT |
| 57 | PT31739057 | KNOB M8-1.25, D32, BALL |

| REF | PART # | DESCRIPTION |
|---|---|---|
| 58 | PT31739058 | HEX NUT M12-1.75 |
| 59 | PT31739059 | RETURN SPRING COVER |
| 60 | PT31739060 | FLAT COIL SPRING |
| 61 | PT31739061 | HEADSTOCK |
| 62 | PT31739062 | CAP SCREW M8-1.25 X 12 |
| 63 | PT31739063 | FLAT WASHER 8MM |
| 64 | PT31739064 | COMPRESSION SPRING 2 X 22 X 80 |
| 65 | PT31739065 | SPEED SHAFT |
| 66 | PT31739066 | LED BULB 1W 3.5V |
| 67 | PT31739067 | LASER DKLD 1801 |
| 68 | PT31739068 | LASER COVER |
| 69 | PT31739069 | PINION GEAR |
| 70 | PT31739070 | DOWNFEED LEVER HUB M10-1.5 |
| 71 | PT31739071 | KNOB BOLT M10-1.5 X 10, D40, ROUND |
| 72 | PT31739072 | LASER SEAT |
| 73 | PT31739073 | SET SCREW M6-1 X 10 |
| 74 | PT31739074 | HEX BOLT M10-1.5 X 40 |
| 75 | PT31739075 | FLAT WASHER 10MM |
| 76 | PT31739076 | MOTOR MOUNT PLATE |
| 77 | PT31739077 | HEX BOLT M8-1.25 X 16 |
| 78 | PT31739078 | MOTOR 1/3HP 120V 1-PH |
| 78-1 | PT31739078-1 | MOTOR FAN COVER |
| 78-2 | PT31739078-2 | MOTOR FAN |
| 78-3 | PT31739078-3 | CAPACITOR COVER |
| 78-4 | PT31739078-4 | R CAPACITOR 25M 250V 3-1/2 x 1-5/8 |
| 78-5 | PT31739078-5 | MOTOR JUNCTION BOX |
| 78-6 | PT31739078-6 | BALL BEARING 6203ZZ |
| 78-7 | PT31739078-7 | MOTOR CORD 3G 3W 39" |
| 79 | PT31739079 | HEX NUT M10-1.5 |
| 80 | PT31739080 | KEY 4 X 4 X 80 SE |
| 81 | PT31739081 | MOTOR SPRING SEAT |
| 82 | PT31739082 | COMPRESSION SPRING 2 X 33 X 78 |
| 83 | PT31739083 | MOTOR PULLEY SET |
| 84 | PT31739084 | SET SCREW M6-1 X 10 |
| 85 | PT31739085 | PHLP HD SCR M4-.7 X 16 |
| 86 | PT31739086 | EXT RETAINING RING 16MM |
| 87 | PT31739087 | SPEED SENSOR MOUNT |
| 88 | PT31739088 | FLAT WASHER 5MM |
| 89 | PT31739089 | PHLP HD SCR M5-.8 X 20 |
| 90 | PT31739090 | SPEED SENSOR DKLD CB07-5C |
| 91 | PT31739091 | TAP SCREW M2.9 X 6 |
| 92 | PT31739092 | EXT RETAINING RING 17MM |
| 93 | PT31739093 | BALL BEARING 6203ZZ |
| 94 | PT31739094 | BUSHING 39 X 27 X 10 |
| 95 | PT31739095 | SPINDLE PULLEY SHAFT |
| 96 | PT31739096 | KEY 4 X 4 X 65 SE |
| 97 | PT31739097 | EXT RETAINING RING 24MM |
| 98 | PT31739098 | BELT GUARD |
| 99 | PT31739099 | SPINDLE PULLEY SET |
| 101 | PT31739101 | EXT RETAINING RING 35MM |
| 102 | PT31739102 | INT RETAINING RING 50MM |
| 103 | PT31739103 | BALL BEARING 61907-ZZ |
| 104 | PT31739104 | SPEED SEAT |
| 105 | PT31739105 | SET SCREW M10-1.5 X 20 |
| 106 | PT31739106 | POLY V-BELT AX35 |
| 107 | PT31739107 | POWER CORD 18G 3W 39.5" 5-15P |
| 108 | PT31739108 | LEVER |



**BUY PARTS ONLINE AT GRIZZLY.COM!**
Scan QR code to visit our Parts Store.

# Main Parts List (Cont.)

| REF | PART # | DESCRIPTION |
|---|---|---|
| 110 | PT31739110 | SPEED SENSOR CORD 24G 3W 10" |
| 113 | PT31739113 | HEX WRENCH 3MM |
| 114 | PT31739114 | HEX WRENCH 4MM |
| 115 | PT31739115 | HEX WRENCH 5MM |

| REF | PART # | DESCRIPTION |
|---|---|---|
| 116 | PT31739116 | DRIFT KEY |
| 117 | PT31739117 | FLANGE SCREW M6-1 X 12 |
| 118 | PT31739118 | EXT RETAINING RING 12MM |
| 119 | PT31739119 | SET SCREW M8-1.25 X 12 |

# Labels & Cosmetics

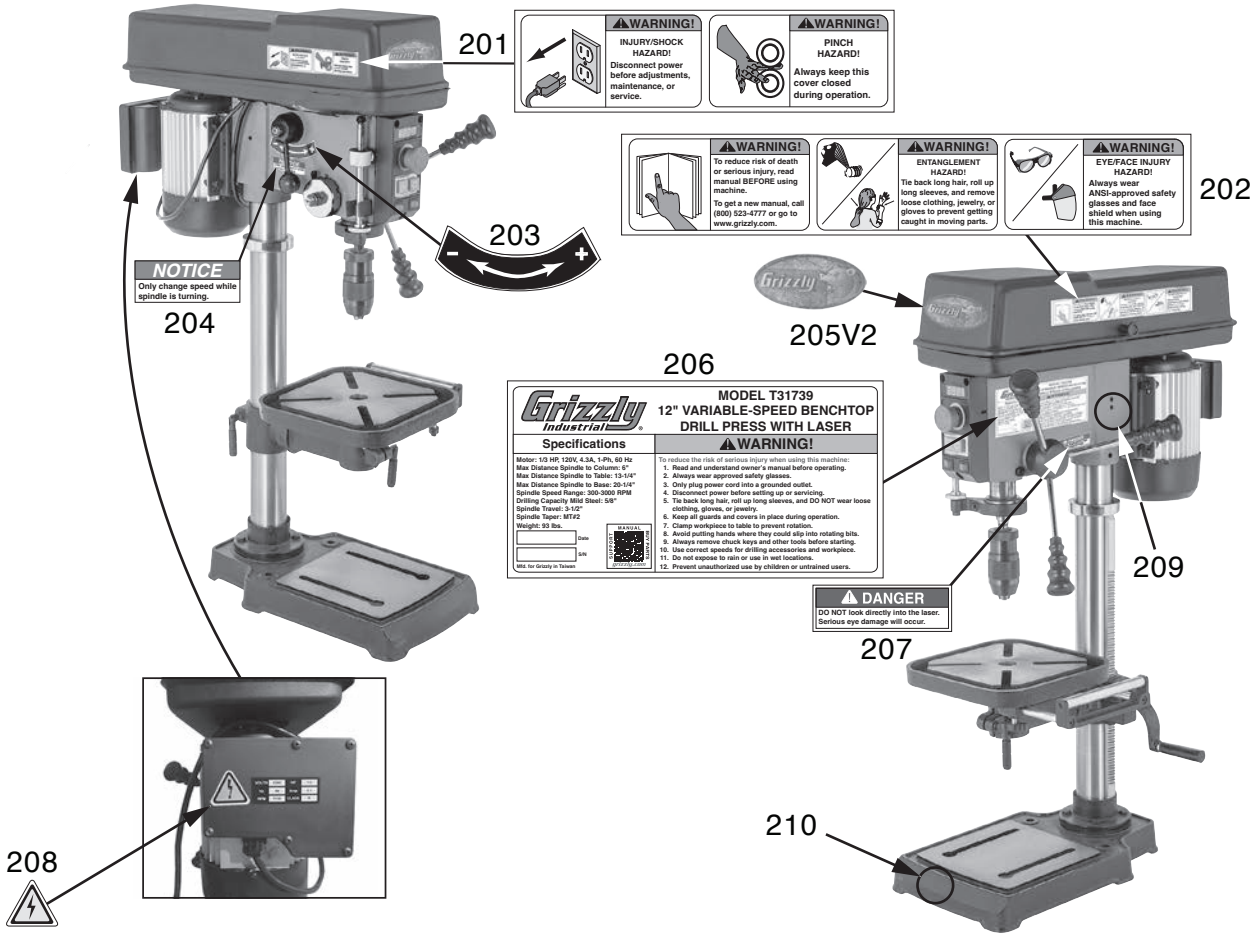


| REF | PART # | DESCRIPTION |
|---|---|---|
| 201 | PT31739201 | SHOCK/PINCH HAZARD LABEL |
| 202 | PT31739202 | MANUAL/ENTANGLEMENT/EYE-FACE LABEL |
| 203 | PT31739203 | SPEED ADJUSTMENT LABEL |
| 204 | PT31739204 | SPEED NOTICE LABEL |
| 205V2 | PT31739205V2 | GRIZZLY NAMEPLATE-MINI V2.11.23 |

| REF | PART # | DESCRIPTION |
|---|---|---|
| 206 | PT31739206 | MACHINE ID LABEL |
| 207 | PT31739207 | LASER LABEL |
| 208 | PT31739208 | ELECTRICITY LABEL |
| 209 | PT31739209 | TOUCH-UP PAINT GRIZZLY GREEN |
| 210 | PT31739210 | TOUCH-UP PAINT GRIZZLY BLACK |

## ⚠WARNING

**Safety labels help reduce the risk of serious injury caused by machine hazards. If any label comes off or becomes unreadable, the owner of this machine MUST replace it in the original location before resuming operations. For replacements, contact (800) 523-4777 or www.grizzly.com.**



**BUY PARTS ONLINE AT GRIZZLY.COM!**
Scan QR code to visit our Parts Store.

# WARRANTY & RETURNS

Grizzly Industrial, Inc. warrants every product it sells for a period of **1 year** to the original purchaser from the date of purchase. This warranty does not apply to defects due directly or indirectly to misuse, abuse, negligence, accidents, repairs or alterations or lack of maintenance. This is Grizzly's sole written warranty and any and all warranties that may be implied by law, including any merchantability or fitness, for any particular purpose, are hereby limited to the duration of this written warranty. We do not warrant or represent that the merchandise complies with the provisions of any law or acts unless the manufacturer so warrants. In no event shall Grizzly's liability under this warranty exceed the purchase price paid for the product and any legal actions brought against Grizzly shall be tried in the State of Washington, County of Whatcom.

We shall in no event be liable for death, injuries to persons or property or for incidental, contingent, special, or consequential damages arising from the use of our products.

The manufacturers reserve the right to change specifications at any time because they constantly strive to achieve better quality equipment. We make every effort to ensure that our products meet high quality and durability standards and we hope you never need to use this warranty.

In the event you need to use this warranty, contact us by mail or phone and give us all the details. We will then issue you a "Return Number," which must be clearly posted on the outside as well as the inside of the carton. We will not accept any item back without this number. Proof of purchase must accompany the merchandise.

Please feel free to write or call us if you have any questions about the machine or the manual.

Thank you again for your business and continued support. We hope to serve you again soon.

To take advantage of this warranty, you must register it at **https://www.grizzly.com/forms/warranty**, or you can scan the QR code below to be automatically directed to our warranty registration page. Enter all applicable information for the product.



# grizzly.com®

TOOL WEBSITE

**Buy Direct and Save with Grizzly® – Trusted, Proven and a Great Value!**

***~Since 1983~***

***Visit Our Website Today For Current Specials!***

**ORDER**

**24 HOURS A DAY!**

**1-800-523-4777**

