UNIQUE®
OFF-GRID APPLIANCES

UGP-20G OF1
20” (50.8 cm)

CLASSIC GAS RANGE
(LPG & NG convertible)

INSTALLATION AND OWNER’S MANUAL

SERIAL NUMBER:

READ AND SAVE THESE INSTRUCTIONS

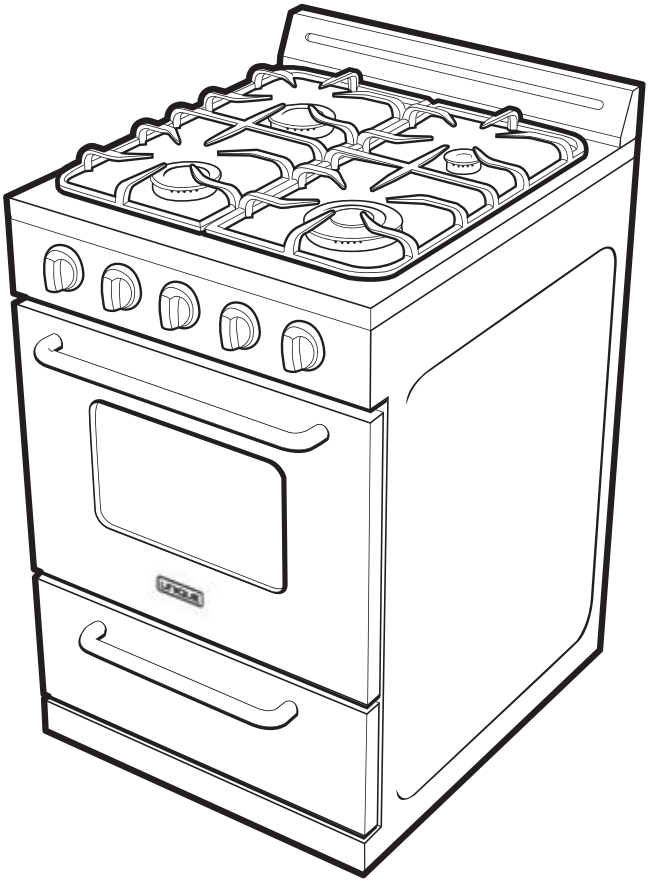

UNIQUE 20G CLASSIC MODEL

OFF GRID GAS RANGE – LPG & NG CONVERTIBLE

Installation and Owner's Manual

This manual contains information for:

- Important Safeguards
- Installation
- Use and Care

Certain ranges come equipped with special features. Determine from a study of your range which of the instructions given in this booklet pertain to your range.

This booklet gives valuable instructions covering the installation, adjustment and use of your range.

How to Obtain Service and/or Parts

When your range does not operate in accordance with the instructions in the manual, you should contact the dealer in your immediate vicinity for service. Or, the purchaser may contact the service organization noted on the warranty.

Important

TO THE OWNER OF THE RANGE: Retain this owner's manual for future reference.
TO THE INSTALLER: Leave this owner's manual with the range.

Read and Save These Instructions

The installation of the appliance must conform with local codes ANSI Z21.1b-2012, in the absence of local national Fuel Gas Code, ANSI Z233.1, and in Canada B149.2 Propane Storage and Handling Code

UNIQUE
OFF-GRID APPLIANCES

MANUFACTURED AND CERTIFIED BY

Unique Gas Products Ltd

WARNING: If the information in this manual is not followed exactly, a fire or explosion may result causing property damage, personal injury or death.

— Do not store or use gasoline or other flammable vapors and liquids in the vicinity of this or any other appliance.

— WHAT TO DO IF YOU SMELL GAS

- Do not try to light any appliance.
- Do not touch any electrical switch.
- Do not use any phone in your building.
- Immediately call your gas supplier from a neighbor's phone. Follow the gas supplier's instructions.
- If you cannot reach your gas supplier, call the fire department.

— Installation and service must be performed by a qualified installer, service agency or the gas supplier.

⚠WARNING **A child or adult can tip the range and be killed. Install the anti-tip device to the structure and/or the range. Verify the anti-tip device has been properly installed and engaged. Engage the range to the anti-tip device by ensuring the anti-tip device is re-engaged when the range is moved. Re-engage the anti-tip device if the range is moved. Do not operate the range without the anti-tip device in place and engaged. See installation instructions for details. Failure to do so can result in death or serious burns to children or adults."**

If this range is removed for any reason, service or cleaning, etc., it must be replaced as outlined in the installation instructions before placing the range back in operation.

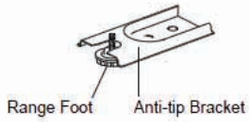

x2

Making sure the anti-tip bracket is installed:

- Slide range forward.
- Look for the anti-tip bracket securely attached to floor.
- Slide range back so rear range foot is under anti-tip bracket.

2245 Wyecroft Road #5
Oakville, Ontario Canada L6L 5L7
Ph: 905-827-6154 Toll Free: 1-877-427-2266 Fax: 905-827-2027
www.UniqueOffGrid.com

Table of Contents

Contents

Important Safeguards	**Page 1 - 7**
Energy Saving Ideas	**Page 8**
Installation Instructions	**Pages 9-12**
Wall Clearances & Anti-Tip Location	**Page 13-14**
NG Conversion Instructions	**Pages 15-19**
Adjusting the Top Burner and Oven Flame	**Pages 20-21**
Operation of Range	**Pages 22-24**
Alignments and Adjustments	**Page 25-27**
Broiling	**Page 28**
Cleaning the Range	**Page 29-31**
Lift-Off Doors	**Page 31**
How to Gain Access to the Battery	**Page 32**
Troubleshooting Guide	**Page 33**
Wiring Diagram	**Page 34**
Parts Diagram and List	**Page 35**
Warranty	**Page 38**

Welcome & Congratulations

Congratulations on your purchase of a UNIQUE range!. We are very proud of our product – and are completely committed to providing you with the best service possible. Your satisfaction is our #1 priority. Please read this manual very carefully. It contains valuable information on how to properly maintain your new Unique gas range.

We know you will enjoy your new range and Thank You for choosing one of our Unique Gas Products! We hope you will consider us for future purchases.

PLEASE READ AND SAVE THESE INSTRUCTIONS

This manual provides specific operation instructions for your model. Use your range only as instructed in this manual. These instructions are not meant to cover every possible condition and situation that may occur. Common sense and caution must be practiced when installing, operating and maintaining the appliance

Record in the space provided below the Model No. and Serial No. of this appliance. These numbers are found on the serial plate located at the back of the range.

Model No. _____ Type Number _____

Serial No. _____ Purchase Date_____

Record these numbers for future use.

IMPORTANT: Keep a copy of your bill of sale. The date on the bill establishes the warranty period should service be required. If service is performed, it is in your best interest to obtain and keep all receipts.

PLEASE DO THIS NOW!

The PRODUCT REGISTRATION CARD should be filled in completely, signed and returned. This information will register your product and help us to serve you quickly in the future if necessary.

READ ALL IMPORTANT SAFEGUARDS AND ALL INSTRUCTIONS BEFORE USING THE APPLIANCE.

If you smell gas

- Open windows
- Don't touch electrical switches
- Extinguish any open flame
- Immediately call your gas supplier

FOR YOU SAFETY

- Keep appliance area clear and free from combustible materials gasoline and other flammable vapors and liquids.

Warnings

Destroy the carton and plastic bags after the range is unpacked. Children should not use packaging material for play. Cartons covered with rugs, bedspreads, or plastic sheets can become airtight chambers. Remove all staples from the carton. Staples can cause severe cuts and destroy finishes if they come in contact with other appliances or furniture.

Be safety conscious. The preparation of food in an oven requires temperatures that could cause severe burns. Before using this new appliance, carefully read and follow all instructions.

WARNING

The California Safe Drinking Water and Toxic Enforcement Act of 1986 (Proposition 65) requires the Governor of California to publish a list of substances known to the State of California to cause cancer or reproductive harm. In addition, businesses must warn customers of potential exposure to such substances.

Users of this appliance are hereby warned that the burning of gas can result in low-level exposure to some of the listed substances, including formaldehyde, benzene, soot and carbon monoxide. This is caused primarily from the incomplete combustion of natural gas or LP fuel. Properly adjusted burners will minimize incomplete combustion. Exposure to these substances can also be minimized by properly venting the burners by opening a window or using a ventilating hood or fan.

Notice: Never keep pet birds in the kitchen. Birds have a very sensitive respiratory system. Fumes released from cooking oil, fat, margarine or overheated non-stick cookware may be harmful or fatal to birds.

PROPER INSTALLATION: Be sure a qualified technician in accordance with the National Fuel Gas Code ANSI Z223.1/NFPA54 properly installs your appliance. Install only per installation instructions provided in the literature package for this range. Be sure leveling legs are in place at the bottom corners of the range. If necessary, raise or lower the leveling legs at the base of the range by turning clockwise or counter clockwise to insure a level range.

Ask your dealer to recommend a qualified technician and an authorized repair service. Have the technician familiarize you with the locations of the manual gas shut off valve and gas meter in the event it is necessary to shut off gas supply to the unit during an emergency.

WARNING **The following situations may cause serious bodily harm, death or property damage.**

TO REDUCE THE RISK OF TIPPING OF THE RANGE, THE RANGE MUST BE SECURED BY A PROPERLY INSTALLED ANTI-TIP BRACKET PROVIDED WITH THE RANGE. TO CHECK IF THE DEVICE IS INSTALLED AND ENGAGED PROPERLY, CAREFULLY TIP THE RANGE FORWARD. THE ANTI-TIP DEVICE SHOULD ENGAGE AND PREVENT THE RANGE FROM TIPPING OVER. REFER TO THE INSTALLATION INSTRUCTIONS PACKAGED WITH THE ANTI-TIP BRACKET FOR PROPER ANTI-TIP BRACKET INSTALLATION.

- **Never leave children alone or unattended in the area where an appliance is in use**. They should never be allowed to sit or stand on any part of the appliance. Never leave the oven door open when the range is unattended.
- **Do not store items of interest to children in the cabinets above a range or on the backguard of a range.** Children climbing on the range to reach the items could be seriously injured.

Do not allow children to climb or play around the range. The weight of a child on an open oven door may cause the range to tip, resulting in serious burns or other injury.

IMPORTANT: Observe all governing codes and ordinances. Do not obstruct flow of combustion and ventilation air.

USER SERVICING: Do not repair or replace any part of the appliance unless specifically recommended in this owner's guide. Only a qualified technician should do all other servicing. This will reduce the risk of personal injury and damage to the range.

Storage in or on appliance: Flammable materials should not be stored in an oven, near surface burners or in the broiler section. This includes paper, plastic and cloth items, such as cookbooks, plastic ware and towels, as well as flammable liquids. Do not use the oven for storage. Do not store explosives, such as aerosol cans, on or near the range.

Remove the oven door from any unused range if it is to be stored or discarded.

Stepping, leaning or sitting on the doors or broiler section of this range can result in serious injuries and cause damage to the range.

CAUTION

The following situations could cause bodily injury or property damage.

DO NOT TOUCH SURFACE BURNERS, AREAS NEAR THESE BURNERS, OVEN BURNERS OR INTERIOR SURFACES OF THE OVEN. Both surface burners and oven burners may be hot even though the flame is not visible. Areas near surface burners may become hot enough to cause burns. During and after use, do not touch, or let clothing or other flammable materials touch these areas until they have had sufficient time to cool. Among these areas are the range, surfaces facing the range, the oven vent openings and surfaces near these openings, oven door and windows.

WARNING

NEVER use this appliance as a space heater to heat or warm the room. Doing so may result in carbon monoxide poisoning and overheating of the oven.

Wear proper apparel. Loose fitting or hanging garments should never be worn while using the appliance. Do not let clothing or other flammable materials contact surface burners or interior surfaces of the oven until they have had sufficient time to cool.

Never modify or alter the construction of the range. Do not remove leveling legs, panels, wire covers, anti-tip brackets or any other permanent part of the product.

When heating fat or grease, watch it closely. Fat or grease may catch fire if allowed to become too hot.

Do not use water or flour on grease fires. Smother the fire with a pan lid, baking soda or use a dry chemical or foam-type extinguisher.

Operation of the Surface Burners. When the burners are operated for the first time, a small amount of smoke may be generated due to tape residue or manufacturing lubrication, **this is not dangerous**. Operate the burners for about five minutes to rid the burners of this material before cooking.

Use only dry potholders. Wet or damp potholders on hot surfaces could result in burns from steam. Do not let the potholder touch hot heating areas. Do not use a towel or other bulky cloth instead of a potholder.

Use proper flame size. Adjust flame size so it does not extend beyond the edge of the cookware. The use of undersized cookware will expose a portion of the burner flame and may result in severe burns or direct contact and ignition of clothing. Also, proper relationship of cookware to burner will improve efficiency.

WARNING

NEVER cover any slots, holes or passages in the oven bottom or cover an entire rack with materials such as aluminum foil. Doing so blocks air flow through the oven and may cause carbon monoxide poisoning. Aluminum foil linings may also trap heat, causing a fire hazard. Refer to the cleaning section of this manual for more information on the use of aluminum foil.

Placement of oven racks: Always place an oven rack in the desired location while the oven is cool. If a rack must be moved when the oven is hot, use potholders and grasp the rack with both hands to reposition. Do not let potholders contact hot oven walls. Remove all cookware from the rack before moving.

Do not heat unopened food containers. Build-up of pressure may cause the container to burst and result in injury.

Keep the oven vent duct unobstructed. The oven vent is located along the bottom of the back guard. Touching the surfaces in the vent area when the oven is being operated may cause severe burns. Also, do not place plastic or heat-sensitive items on or near the oven vents. These items could melt or ignite. The range requires fresh air for proper burner combustion. Do not block the flow of air around the base or beneath the lower front panel of the range.

Use care when opening oven door: Stand to the side of the oven when opening the oven door. Slowly open the door to allow hot air or steam to escape before removing or replacing food.

Know which knob controls each burner. Place a pan of food on the burner before turning it on, and turn the burner off before removing the pan. Always turn to the full

position when igniting top burners. Then adjust the flame size so it does not extend beyond the edge of the cookware.

Cookware handles should be turned inward and not extend over adjacent surface burners. To reduce the risk of burns, ignition of flammable materials, and spillage due to unintentional contact with the cookware, the handle of a cookware should be positioned so that it is turned inward, and does not extend over adjacent surface burners.

Never leave the surface burners unattended. Boilovers may cause smoking, greasy spill-overs may catch fire or a pan which has boiled dry may melt.

Do not place hands between the spring tension hinge and the oven door frame when you are removing the oven door. You could pinch your fingers.

Do not use the broiler pan without its insert. The broiler pan and its insert allow dripping fat or grease to drain and be kept away from the high heat of the broiler. Do not cover the insert with foil. Exposed fat or grease could ignite.

Allow parts to cool to room temperature before touching or removing them from the range. When a surface burner is first turned off, the burner and grate are hot enough to cause burns.

Clean the range regularly to keep all parts free of fat or grease, which could catch fire. Pay particular attention to the area underneath each surface burner. Exhaust fan ventilating hoods and grease filters should be clean. Do not allow fat or grease to accumulate. Greasy deposits in the fan could catch fire. Refer to the hood manufacturer's instructions for cleaning.

Do not use a "cyclonic" range hood with this product. Some range hoods circulate air by blowing downward toward the range top then drawing the air back up into the hood. This creates a "cyclonic" air wash that is designed for electric ranges only. A "cyclonic" hood may cause the burners of a gas range to operate improperly.

Glazed cookware: Only certain types of glass, glass/ceramic, ceramic, earthenware, or other glazed cookware are suitable for rangetop service without breaking, due to the sudden change in temperature. Check the manufacturer's recommendations for rangetop use.

Do not place plastic salt and pepper shakers, spoon holders or plastic wrappings on top of the range. These items could melt or ignite. Potholders, towels or wooden spoons could catch fire if placed too close to the flame.

Do not use a wok equipped with a metal ring that extends beyond the burner. Because this ring traps heat, the burner and grate could be damaged. Also, the burner may not work properly, creating a carbon monoxide level above current health standards.

Do not clean the oven door gasket. The door gasket is essential for a good seal. Care should be taken not to rub, damage or move the gasket.

Flexible Connectors: If the gas range/oven is connected to a gas supply with a metal flexible connector, move the range/oven with CAUTION for service or cleaning.

Flexible connectors are not intended for repeated bending. Do not allow cleaners to make contact with flexible connectors.

The connector and its fittings are designed for use only on the original installation and are not to be reused for another appliance or at another location. Connectors must comply with ANSI Z21.24.

It's good practice for each household to have an appropriate fire extinguisher for use in the event of a house fire.

NOTE: The instructions appearing in this owner's guide are not meant to cover every possible condition and situation that may occur. Common sense and caution must be practiced when operating and maintaining any appliance.

WARNING **On sealed burner models never attempt to operate the surface burners without the cooktop, burner caps, and ignition wires firmly in place. There is a risk of fire and/or explosion which could result in personal injury or property loss.**

ENERGY-SAVING IDEAS

Surface Cooking
Use lids when surface cooking. A lid traps steam and uses it to speed up the cooking process. If you have a pressure cooker or vegetable steamer, use it. You'll waste fewer vitamins, save time and cut energy costs.

Use medium-weight, flat bottomed pans that match the flame size. Choose pans made of metals that conduct heat well.

When cooking on a surface burner, use as little water as possible to reduce cooking time.

Oven Cooking
Preheat the oven only when a recipe tells you. Put roasts and casseroles into a cold oven; then turn on the oven.

Opening the oven door often to check on foods wastes energy.

Use the oven to prepare complete meals. For instance, start a roast, add vegetables when the meat is half-cooked, and then warm rolls or dessert after the main dishes are cooked.

Thaw frozen foods before cooking. Thawed food requires less cooking energy than frozen food.

Make it a habit to turn the oven off before removing the cooked food.

INSTALLATION INSTRUCTIONS

Be sure appliance is properly installed and grounded by a qualified technician.
It is the responsibility of the technician to make certain that your range is properly installed. Situations caused by improper installation are not covered under the warranty. Any expenses incurred due to such situations will not be paid by the manufacturer of the appliance.

⚠WARNING A child or adult can tip the range and be killed. Install the anti-tip device to the structure and/or the range. Verify the anti-tip device has been properly installed and engaged. Engage the range to the anti-tip device by ensuring the anti-tip device is re-engaged when the range is moved. Re-engage the anti-tip device if the range is moved. Do not operate the range without the anti-tip device in place and engaged. See installation instructions for details. Failure to do so can result in death or serious burns to children or adults."

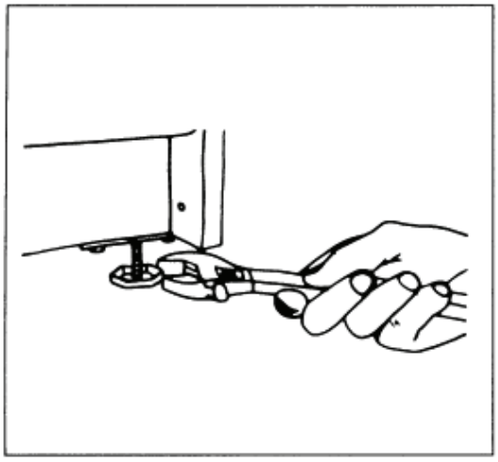

If this range is removed for any reason, (eg. service or cleaning), it must be replaced as outlined before placing the range back in operation.

Levelling a Free-Standing Range

All free-standing ranges must be level to obtain proper cooking results. The leveling legs should be screwed into the corner brackets. Place pan or measuring cup partially filled with water or a level on the oven rack. Adjust the leveling legs until the range is level. The top of the aside panels should be level with the counter top.

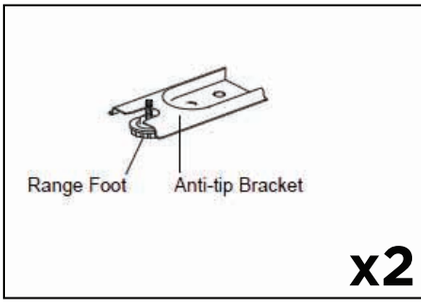

Making sure the anti-tip bracket is installed:

- Slide range forward.
- Look for the anti-tip bracket securely attached to floor.
- Slide range back so rear range foot is under anti-tip bracket.

GAS CONNECTIONS (All Units)

NOTICE TO MASSACHUSETTS APPLIANCE DEALERS:
Be sure this document is included in all gas range appliances sold to consumers in the State of Massachusetts.

NOTICE: Massachusetts law requires the following:

- Appliances must be installed by a licensed plumber or gas fitter.
- Appliances must be connected with a three (3) foot (36" maximum length) flexible gas connector and
- A "T" handle type manual gas valve in the gas supply line to the appliance.

&
Have the dealer where you purchase your new range install it or have him recommend a qualified installer. Installation must conform with local codes. In the absence of local codes, the installation must conform with the National Fuel Gas Code, ANSI Z223.1-Latest Edition in the U.S.A. or the CAN/CGA B149.1 or .2 Installation Codes in Canada.

The range should be connected to the supply line with 1/2-inch black iron pipe or a certified flexible type range connector. To prevent gas leaks, put an approved sealing compound, which is resistant to liquefied petroleum gases, on all threaded connections.

Important: Do not apply pressure directly to the range manifold pipe when tightening supply connections. The manifold pipe should be held securely at the pressure regulator to prevent twisting. Hold the pressure regulator with a wrench during the tightening of the connection, or the manifold pipe may be twisted and split, and cause a dangerous leak.

The installation of ranges designed for manufactured (mobile) home installation must conform with the Manufactured Construction and Safety, Title 24 CFR, Part 3280, [formerly the Federal standard for Mobile Home Construction and Safety, Title 24, HUD (Part 280)] in the U.S.A. or C.S.A. Standard CAN/CGA Z240.4.2 in Canada or, when such standards are not applicable with local codes.

The installation of ranges designed for recreational vehicle installation must conform to state or other codes and in the absence of such codes with the standard for recreational vehicles ANSI A119.2.2–1982 in the U.S.A. or CAN/CGA Z240.4.2 in Canada. The installation of appliances designed for recreational park trailers must conform to recreational park trailers, ANSI A119.5.

Note: Check all piping connections in the unit for leaks. Never use an open flame to check for gas leaks. Use a soap solution with a recommended ratio of 75% water and 25% dish washing soap. It's possible for connections made at the factory to leak, due to vibration encountered in transportation. Make certain you have checked them all, and repair any connections that leak.

The appliance and its individual shut-off valve must be disconnected from the gas supply piping system during any pressure testing of that system at test pressures in excess of ½ psig.

The appliance must be isolated from the gas supply piping system by closing its individual manual shut-off valve during any pressure testing of the gas supply piping system at test pressures equal to or less than 1/2 psig.

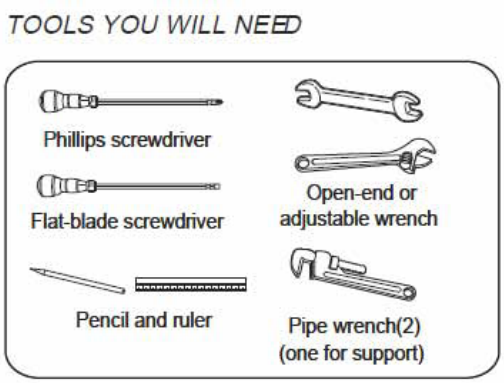

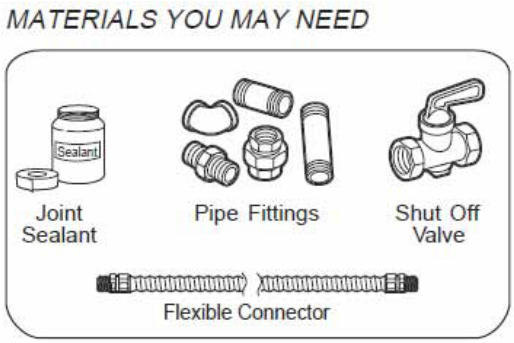

- Gas line shut-off valve
- To reduce the possibility of gas leaks, apply Teflon tape or a thread compound approved for use with LP or Natural gases to all threaded connections.
- Use a flexible appliance connector to connect your gas supply to the appliance. A 3 foot length is recommended for ease of installation but other lengths are acceptable. Never use an old connector when installing a new range.
- Check for leaks using a leak detector or soapy water with a recommended ratio of 75% water, 25% dish washing soap.

Installation

It is the responsibility of the installer to make certain that the range is properly adjusted at the time of installation. Situations caused by improper adjustments or improper installation are not covered under the warranty. Any expenses incurred due to such situations will not be paid by the manufacturer of the appliance.

Connecting gas to range

This range is designed to operate at a pressure of 4" of water column on natural gas (NG) or 10" of water column on propane gas (LPG).

Make sure you are supplying your range with the type of gas for which it is designed. **This range comes equipped from the factory equipped for use with LPG (propane).** This range is convertible for use on natural gas (NG) also. (natural gas

orifices included in the packaging). When using this on NG gas, conversion must be made by a qualified NG installer before attempting to operate the range on that gas.

For correct operation, the pressure of natural gas supplied to the regulator should be between 4" and 5" of water column. For LP gas, the pressure supplied must be between 10" and 12" of water column.

When checking for correct operation of the regulator, the inlet pressure must be at least 1" more than the operating -manifold- pressure as given above. The pressure regulator located at the back of the range manifold must remain in the supply line regardless of whether natural or LP gas is being used.

Regulator is only good for ½ psi (14" w.c.) so test pressure must not exceed ½" psi.

Shut off the main gas supply valve before removing the old range and leave it off until the new hook-up has been completed. Don't forget to relight the pilot on other gas appliances when you turn the gas back on.

Because hard piping restricts movement of the range, the use of a CSA certified flexible metal appliance connector is recommended unless local codes require a hard-piped connection. Never reuse an old connector when installing a new range. If the hard piping method is used, you must carefully align the pipe; the range cannot be moved after the connection is made.

To prevent gas leaks, use pipe joint compound resistant to LP or NG gases (depending on set up) on all male -external- pipe threads.

1. In an easily accessible location, install a service manual gas shut off valve. Be sure everyone operating the range knows where and how to shut off the gas supply to the range.

2. When all connections have been made, be sure all range controls are in the off position and turn on the main gas supply valve. Check for gas leaks by using a soap and water solution. If a gas leak is present, shut off gas immediately, tighten all connections, and retest for leaks.

3. Any opening in the wall behind the appliance and in the floor under the appliance shall be sealed.

After installation:

1. Check ignition of cooktop burners.

2. Check ignition of oven burner.

3. Check for gas leaks at all gas connections (using a gas detector, never a flame)

WALL CLEARANCES

All units must be installed in accordance to minimum rear and side wall clearance and clearances extended vertically above cooking top which are stated on the serial plate located at the back of the range.

ANY OPENINGS IN THE WALL BEHIND THE UNIT AND IN THE FLOOR UNDER THE UNIT MUST BE SEALED.

Note. Due to potential hazards it is recommended that storage cabinets **NOT** be installed above the cooking surface.

IN THE EVENT OVERHEAD CABINETS ARE INSTALLED, THE MAXIMUM DEPTH OF CABINETS INSTALLED ABOVE COOKING TOPS SHOULD BE 13".

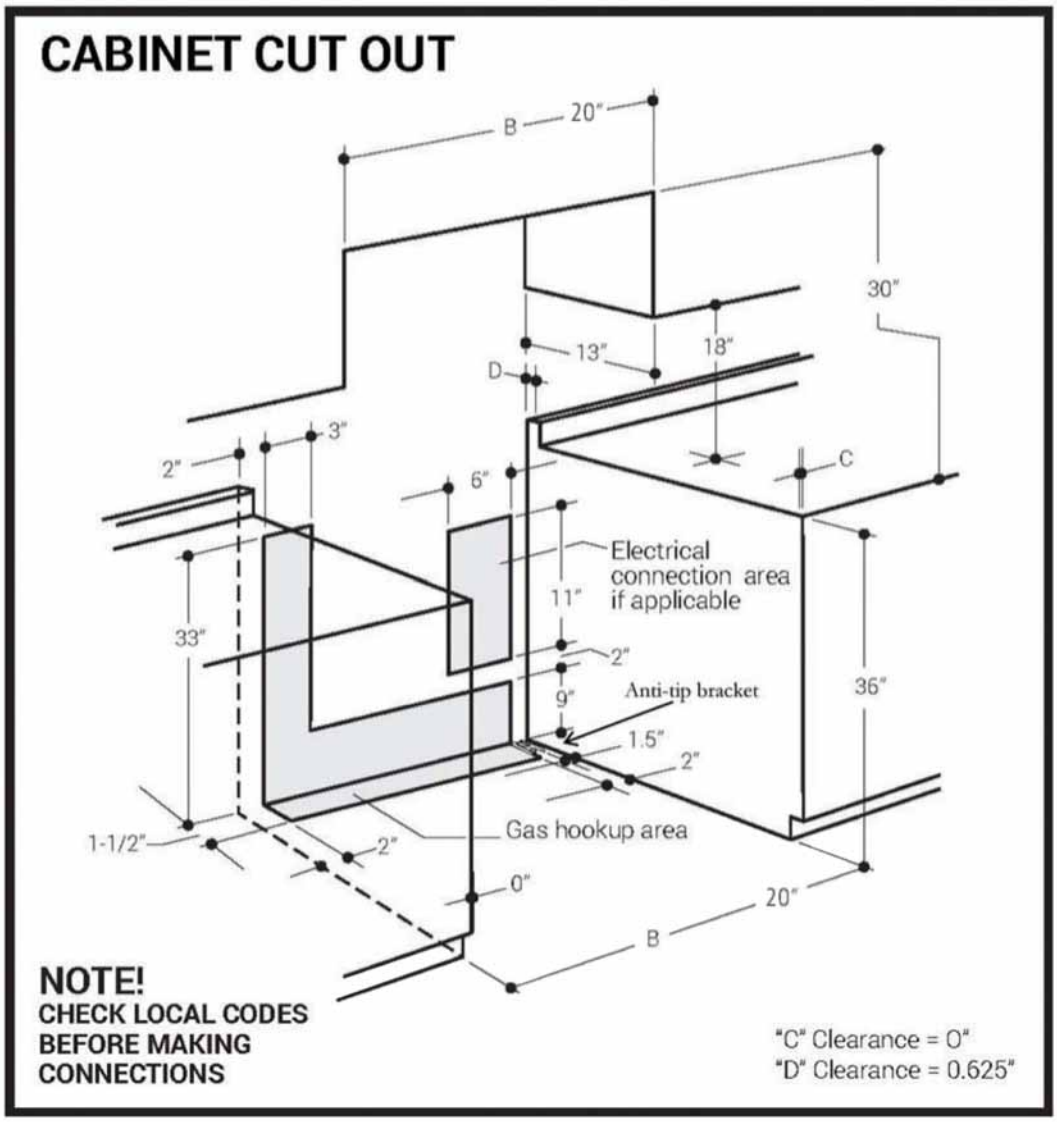

Anti-Tip Bracket Location

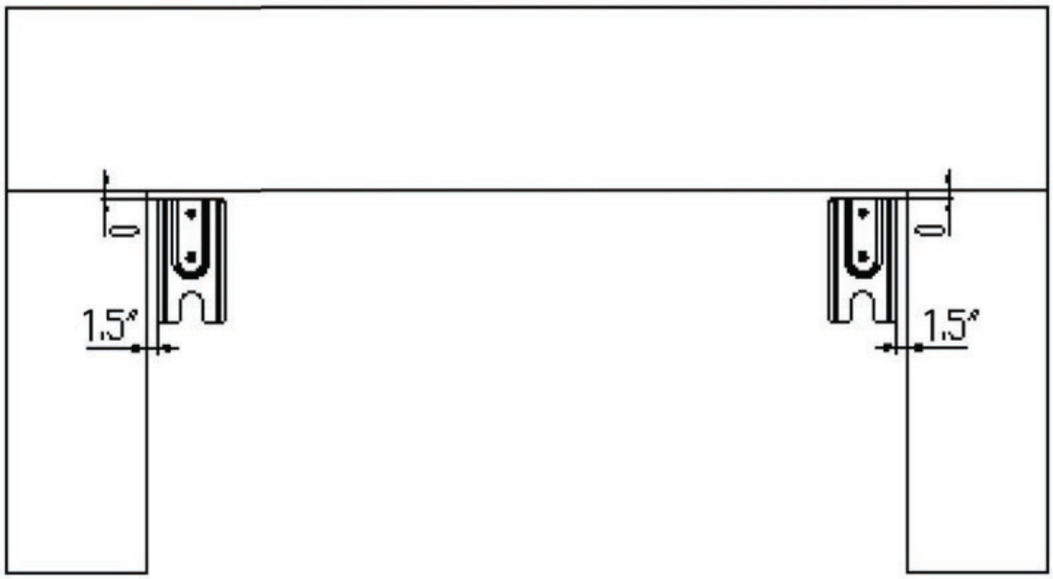

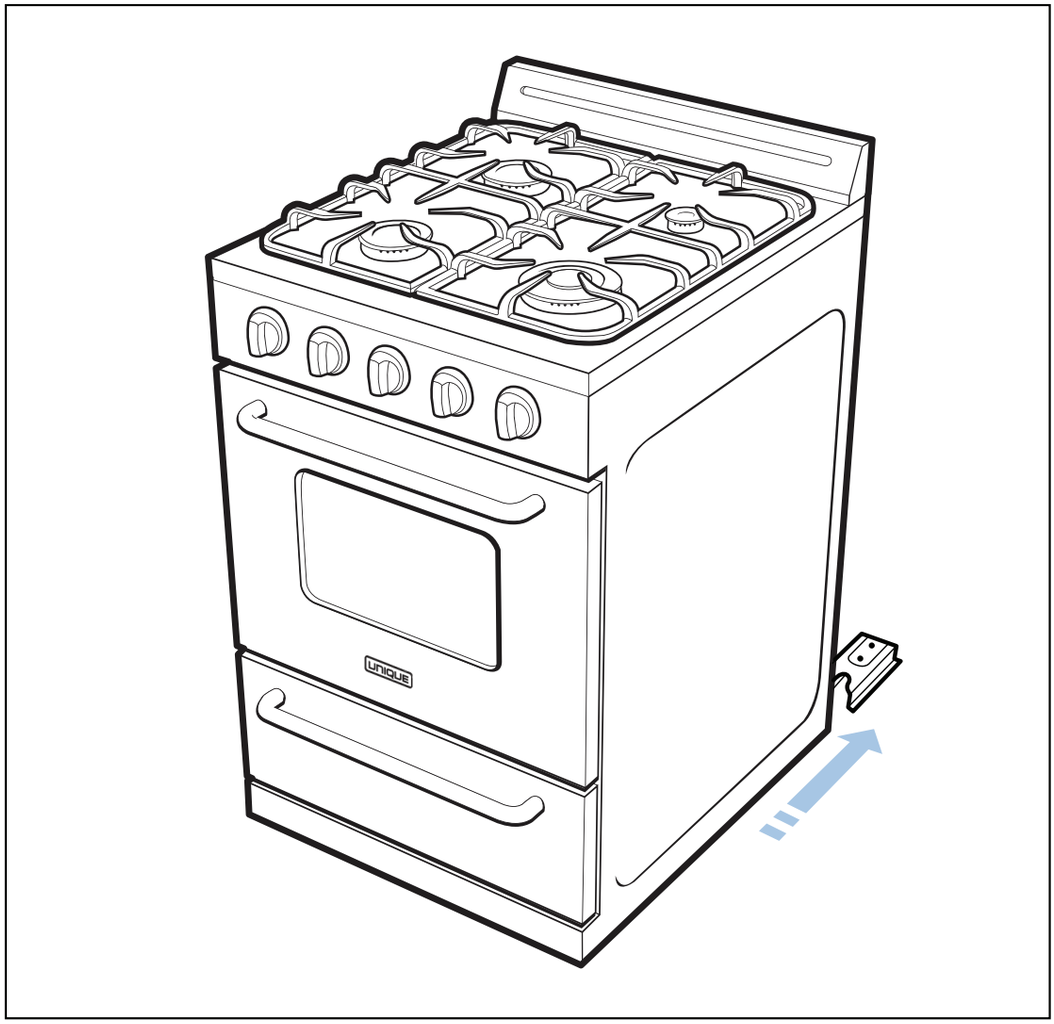

Gas Range Conversion and Adjustment Guide

To Convert Application and/or Adjust from LP to Natural Gas

The range is set for use with Liquefied Petroleum (LP). The factory setting is indicated on the serial plate. When set for LP Gas operation, the pressure regulator will regulate the gas to 10 inches water column pressure. When set for Natural Gas operation, the pressure regulator will regulate the pressure to 4 inches water column.

LPG to NG Conversion

The conversion kit shall be installed by a qualified service agency

"WARNING"

"This conversion kit shall be installed by a qualified service agency in accordance with the manufacturer's instructions and all applicable codes and requirements of the authority having jurisdiction. If the information in these instructions is not followed exactly, a fire, explosion or production of carbon monoxide may result in property damage, personal injury or loss of life. The qualified service agency is responsible for the proper installation of this kit. The installation is not proper and complete until the operation of the converted appliance is checked as specified in the manufacturer's instructions supplied with the kit."

Parts List

1) Nozzles
2) Tool Card
3) Tool
4) Pilot Orifice

1)

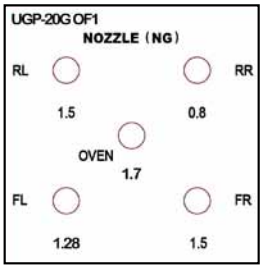

2)

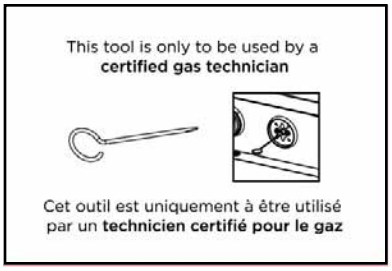

3)

4)

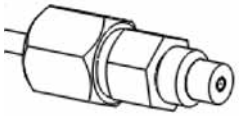

Model Number:
UGP 20G OF1

BURNER INPUT RATING (BTU/h)

	Natural Gas	LP/Propane
REAR LEFT	9,000	9,000
REAR RIGHT	3,000	3,000
FRONT LEFT	7,000	7,000
FRONT RIGHT	9,000	9,000
OVEN BURNER	12,000	12,000
TOTAL THERMAL LOAD	40,000	40,000

Manifold Pressure: Natural Gas: 4"WC / LP/Propane: 10"WC
Electrical Rating: 1.5V DC. 1.0 A

Convertible Pressure Regulator

The range is shipped to operate on LPG. NG orifices and a special screwdriver for adjusting the minimum flame are shipped with the unit in a separate envelope with the manual. The inlet pressure of the gas supply shall be in accordance with the nominal inlet pressure of the regulator used on the range or 1/2 psig maximum. The range should be tested by pressurizing the regulator with an inlet pressure at least 1 inch water column above the manufacturer's specified manifold pressure shown on the serial plate.

1. **CAUTION:** Before proceeding with the conversion, shut off the gas supply to the appliance prior to disconnecting the electrical power
2. Locate convertible regulator at the back of the range, left side facing appliance. Remove cap and pop out the pin that's attached
3. On the side you will see the pin positon for use with LPG

5. Unscrew pin and flip it to the NG position – long end outwards, spring on inside.

6. Below is an example of additional positions depending on regulator type installed.

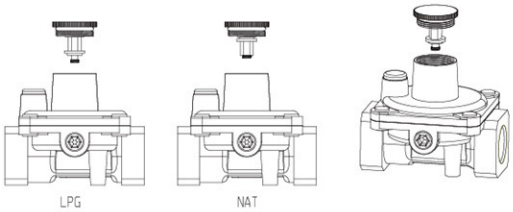

7. Replace the cap back on the regulator
8. Next you will remove the grates, burners and burner caps from the range to access the orifices.
9. You will need a 7mm wrench to remove the orifices. Each orifice can be accessed easily - the larger burner orifice is located on the burner wall.

Burner Orifice

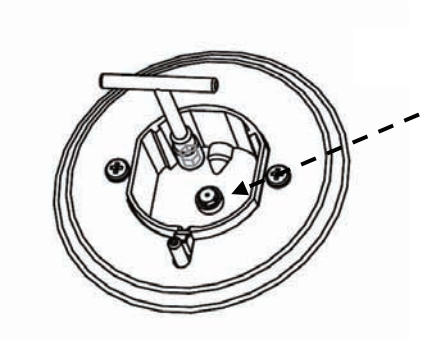

Orifice Location

10. Remove all LPG orifices: place in the bag and store in a safe place.

11. Take the NG orifices provided and install them as shown below

See below for rating of orifice for each model

	Smallest	Medium x 2	Largest	Oven
NG	0.8 mm	1.5 mm	1.28 mm	1.7 mm

12. Once all the orifices are installed, replace all burners and burner caps, then fire up the burners to check the minimum flame height.

13. Minimum flame height should be approx. ¼" tall. There is a small adjustment screw located on the valve itself. The lid and the front control panel must be removed to accomplish this adjustment.

14. Turn the valve fully counter clockwise. Then proceed to adjust the adjustment screw counter clockwise for a smaller flame and clockwise for a larger flame. Adjustment: Minimum flame should be approx. ¼" tall

Flame Height Adjustment

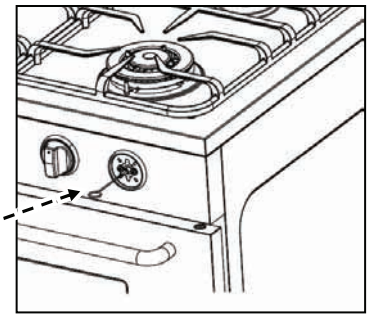

Adjustment location is inside the valve stem

15. Temporarily replace the lid, burners, burner caps and grates and recheck the flame. Once complete, reassemble the control panel and the lid.

16. Next, the oven orifice needs to be replaced.

17. Remove all racks, then the bottom pan by lifting up the back first to release the front then pull pan out.

18. Locate the burner tube and locate the retaining screw at the front of the tube. Once this screw has been removed, lift up the burner and pull away slightly to the right to expose the oven orifice.

19. With a 7mm wrench or pliers remove the orifice and replace with NG orifice.

Oven Orifice

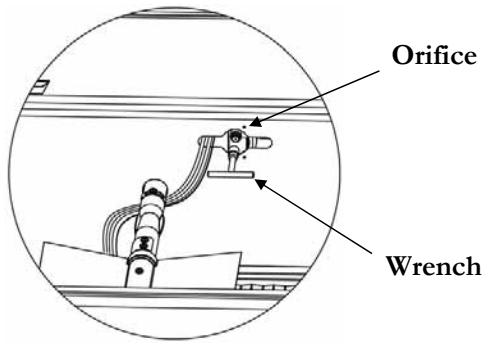

20. Replace the burner tube, then start up the oven to check oven flame, making sure it's tight and blue. Adjust the air shutter at the back of the burner tube to achieve this. Once you have the bottom pan and oven door closed, and with the broiler drawer pulled down, you will be able to see how the flame should look by viewing the flame through the broiler door area.

Pilot Orifice

In the pilot assembly shown below, the LPG orifice is 0.14 mm. When doing the conversion from Propane to Natural gas make sure the pilot orifice is changed to the NG orifice sized at 0.2 mm. If you leave the LPG orifice 0.14mm in place, the pilot flame will may be too small to keep the pilot lit.

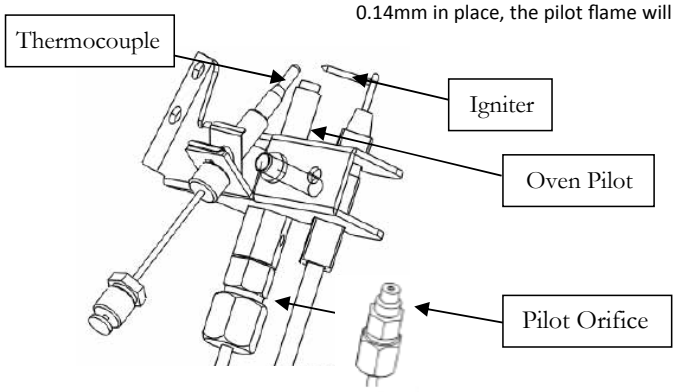

21. Check for leaks using a leak detector or soapy water with recommended ratio of 75% water, 25% dish washing soap.

22. Once you have completed the conversion, check the operations of ignition making sure each of the 4 burners, pilot flame and oven burner flame are functioning correctly. Pleases refer to pages 19 through 22

Checking for Manifold Gas Pressure

To check the manifold gas pressure, remove the burner cap and connect a manometer (water gauge) or other pressure test device to the burner orifice. Use a rubber hose with inside diameter of approximately ¼" hold the end of the tube tight over the orifice. Turn the gas valve on. For a more accurate pressure check, have at least two (2) other top burners burning. Be sure that the gas supply (inlet) pressure is at least one inch above the specified manifold pressure. Maximum gas supply pressure must not exceed 14" inch water column, minimum gas supply pressure must be 1" inch water column above recommended pressure, 12" for propane gas, and 5" water column for natural gas. When properly adjusted the manifold water column pressure is 11"for LP/propane gas or 4" for natural gas.

Note: There is no adjustment for the pilot flame, you must use the NG pilot orifice included in the conversion kit and this will ensure the pilot flame is the correct size. See image

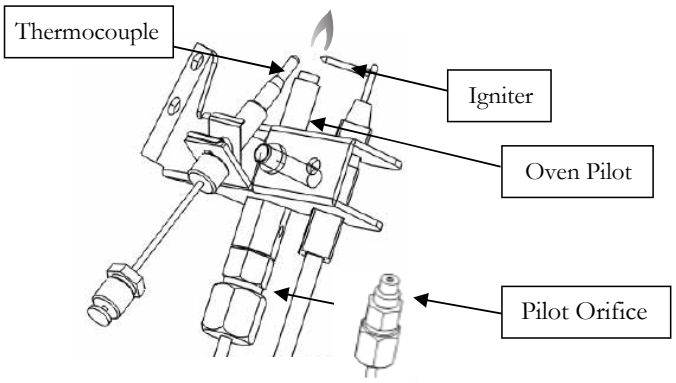

Note: Once the unit has been converted fill out the included sticker and place it on the bottom left side of the kick plate (see image)

This appliance was converted on _____ (day-month-year) to _____ (insert gas type; e.g. Natural or Propane) gas with Kit No. _____ by _____ (name and address of organization making this conversion), which accepts the responsibility that this conversion has been properly made.

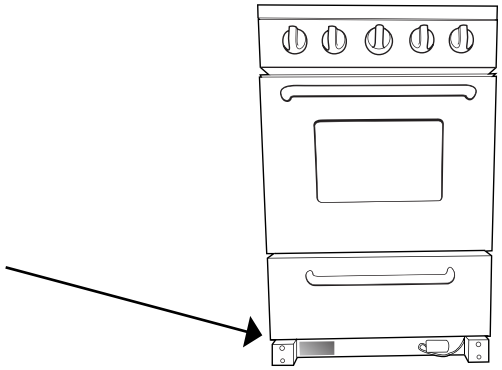

Once you have completed the conversion, check the operations of ignition making sure each of the 4 burners, pilot flame and oven burner flame are functioning correctly. Pleases refer to pages 20 thru 24 – Operation of Range

High Altitude Applications above 2000 feet: At elevations above 2,000 feet, the range must be derated 4% for each 1,000 foot above sea level. It is the installer's responsibility to see that the ranges input rate is adjusted properly.

Adjusting the Top Burner and Oven Flame

WARNING

Keep appliance area clear and free from combustible materials, gasoline, and other flammable vapors and liquids.

Do not obstruct the flow of air that is necessary for combustion and ventilation.

Top Burner Valves

The top burners have orifices that are dedicated to the type of fuel to be used. These orifices are not adjustable. They must be changed completely to convert from one gas to the other. DO NOT DISCARD THE UNUSED ORIFICES. They should be saved in order to convert the range back to its original fuel.

When converting the gas valves, the minimum flame adjustment screw must be adjusted. Please see the supplied screwdriver in the conversion kit along with the orifices. The proper flame size is approximately ¼" obtained. – *see adjustment procedure under conversions page 14.*

The properly adjusted maximum flame is approximately 3/4" high and has three distinct cones; the kindling point, the dark blue center cone, and the outer mantel.

Cooktop Burner Operation

The top burner flame size should be adjusted so that is does not extend beyond the edge of the cookware. As a matter of safety, it's recommended that you comply with these instructions.

A high flame on a surface burner is both inefficient and unsafe. The flame should always be adjusted so that it is no larger than the bottom of the pan. Fluctuations in flame size could be caused by pressure variations, improperly positioned burners, damage or debris.

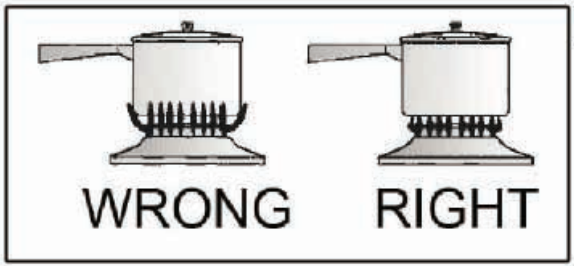

To ignite the burner, depress and turn the valve knob to the left to the 9 o'clock "position". When a top burner knob is pressed in, ALL electrodes will spark at a rate of approximately 2 ½ pulses (sparks) per second. Continue to hold the knob depressed until gas ignites at the burner. Adjust the intensity of top burner heat in the same manner described above.
Note: In the event the electronic ignition system fails, the top burners and oven pilot can be lit by holding a lighted match near the burner head and turning the appropriate top burner knob to the "9 o'clock position".

Top Burner Height

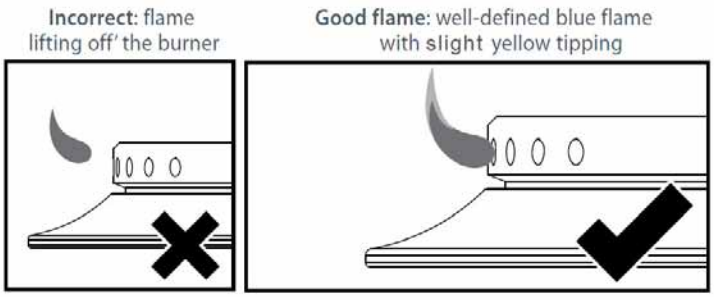

Incorrect and good flame patterns

QUALITY OF FLAMES

The combustion quality of burner flames needs to be confirmed visually.

A Yellow flames — Call for service

B Yellow tips on outer cones — It is normal for LP gas

C Soft blue flames — It is normal for natural gas

If burner flames look like A, call for service.
B or C is normal burner flames, depending on the type of gas you use.
With LP gas, some yellow tipping on outer cones is normal.

Oven Valve

The oven control has a flame safety device built into the body of the thermostat. Presence of a gas ignition source (pilot) is verified by a flame safety probe. This flame safety probe actuates the internal safety device to allow gas into the oven burner when the oven is turned on. If there is a loss of gas ignition during operation, the flame safety device will close off gas flow to the oven burner and pilot.
The oven burner orifice is located on a brass injector stud at the rear of the oven under the oven floor. This orifice is dedicated to the gas for which the oven is to be used. The orifice is not adjustable. It must be changed completely to convert from one gas to the other. DO NOT DISCARD THE UNUSED ORIFICE. It should be saved in order to convert the range back to its original fuel

Oven Pilot

The oven pilot is located along the left hand side of the oven burner. It is fastened to the pilot assembly with the thermocouple and the electrode. The flame of the oven pilot ignites main burner gas when the oven is turned on. If the pilot flame is not present, the flame safety device will not allow pilot gas or main burner gas to flow.

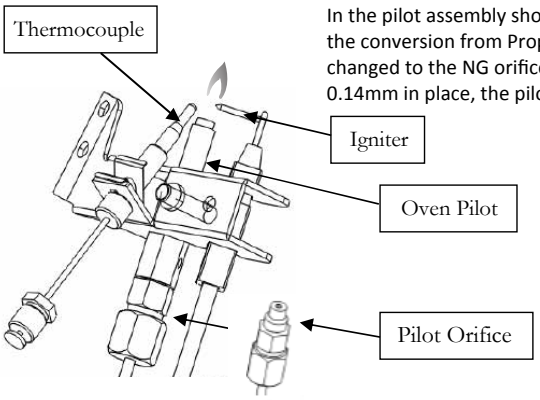

In the pilot assembly shown below, the LPG orifice is 0.14 mm. When doing the conversion from Propane to Natural gas make sure the pilot orifice is changed to the NG orifice sized at 0.2 mm. If you leave the LPG orifice 0.14mm in place, the pilot flame will may be too small to keep the pilot lit.

OPERATION OF RANGE

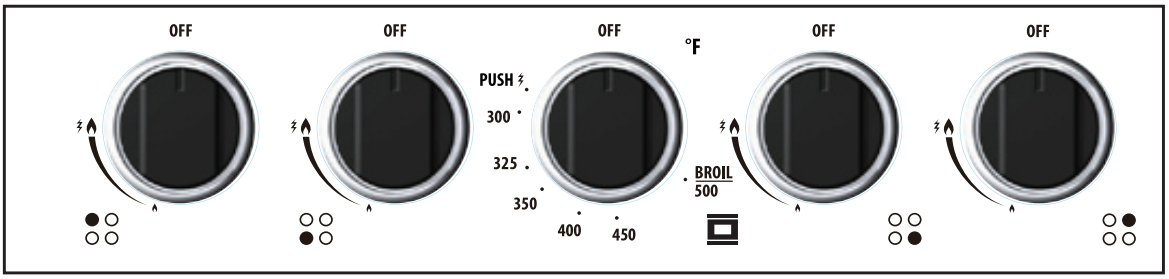

Off	**Off**
High Flame/Ignition	
Burner Position	●
Oven	
Push to Ignite	**PUSH**

Lighting the Top Burners

1. To obtain a flame more easily, light the burner before placing a cooking utensil on the burner grate.
2. Decide which burner you're igniting first using the screened diagram below the burner knob. The black dot indicates the position of the burner you're igniting.
3. To light a burner, press the burner knob in and turn counter clockwise to high flame/ignition position. You will hear the electronic ignition clicking as you continue to hold the knob down until the flame lights. Once the burner is lit, you can then release the knob.
4. After lighting the flame, turn the control knob to adjust the flame size as required.

Lighting the Oven

1. Depending on how long the gas line run is, it may take a while to light the oven pilot. It is suggested that you light a top burner first to ensure the gas is at the valve.
2. Push in on oven knob and turn to the ignition position, you will hear the electronic ignition. Hold until the oven pilot lights. Once lit, count to 10 then release. It should now stay lit; if not, repeat. You can view the pilot by opening the broiler door and look towards the back.
3. Once the oven pilot has been lit, lightly press in the oven control knob and turn counter clockwise to the desired temperature setting. Gently let up on the knob, and the thermostat shaft will release its safety key to let you rotate the control.
4. When finished cooking, you may turn the oven control knob back to the "OFF" position. This will turn off the main oven burner and the pilot.

Note: If you are using the oven for the first time, or the oven has not been used in several days, it may take multiple attempts to successfully light. If the ignitor pilot will not stay lit after 5 attempts, contact an authorized service technician.

If the oven pilot does not ignite and maintain the flame, check the following:

1. **The pilot burner has gone out**. Relight the oven pilot
2. **The thermocouple may not be properly located.** Locate the thermocouple into the flame more otherwise not enough millivolts will be created.
3. **The spark electrode is defective.** Contact an authorized service technician

If the batteries have grown weak and you need to use the oven before you are able to replace with fresh batteries, the oven can be lit manually.

Hot Oven Restart

If you turn off the oven but then decide to turn it back on before it has cooled to room temperature, the burner may not light properly. This is due to the thermostat still sensing "heated oven" and not allowing the maximum gas flow rate into the burner. After the burner lights, you may adjust the oven control to the desired temperature.

It is essential to maintain the gas pressure constantly at 10 inches water column pressure for ranges set for LP Gas; and 4" water column pressure for ranges set for Natural Gas to get proper pilot performance.

MOISTURE: Moisture can have the same effect on the oven ignitor as the pilot flame. If sparking does not occur when the oven thermostat knob is turned on during the initial attempt to use, or after several days of non-use, it COULD BE the result of moisture build-up in the ceramic sleeve of the oven electrode. This may happen in areas with high humidity, or if food having high water content is cooked. This moisture can be driven out of the ignitor by lighting the pilot and operating the oven for a few minutes.

NEVER LEAVE THE CONTROL KNOBS IN ANY POSITION OTHER THAN "OFF" IF THE IGNITORS OR BURNERS AREN'T WORKING PROPERLY.

With the oven control **OFF,** open the broiler door and position yourself so you can see the oven pilot at the back of the oven burner.

If the oven is working, to determine if moisture was the problem, wait a few minutes and attempt to light the oven by turning the oven control dial on. If sparking occurs at the oven electrode to ignite the oven pilot, and within sixty seconds ignites the oven burner, then moisture build-up was the problem. If the oven burner doesn't ignite within 60 seconds, turn the oven control off and call the serviceman.

If for some reason there isn't sparking, this would indicate the module isn't functioning properly, or the batteries are low. If oven cooking is necessary, you may manually light the oven.

Make certain the oven is cool when manually lighting oven pilot.

Alignments and Adjustments

Oven Burner Air Shutter Adjustment

The oven burner flame should be a clean, blue flame with distinct inner cones. A soft, lazy flame with indistinct cones means too much gas or not enough air. A noisy lifting flame indicates too much air. If adjustments are necessary, you must first loosen the lock screw located at the top of the air shutter at the back of the burner tube, then rotate the air shutter to the correct setting, and retighten screw.

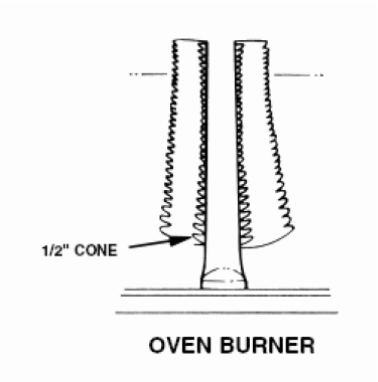

Oven burner flame can be checked as follows (without flame spreader in place):

- To correct a yellow flame - Increase size of air shutter opening.
- To correct a lifting, but distinct, blue flame - Decrease size of air shutter opening.

The air shutter should be set approximately 2/3 open for natural gas, and approximately full open on LP gas.

Preheating

Heat the oven to the desired temperature before placing the food in the oven. Preheat for 10 to 12 minutes.

Opening Oven Door

Let hot air or steam escape before removing or replacing food.

Arranging Oven Racks

The oven racks should be arranged before the oven is turned "ON." Place the racks so the food is centered in the oven.

Temperature Selection
It is important to select to proper temperature setting. Imagine that the control has three sections: **Warm**, **Bake**, and **Broil**.

Warming
The broiler section of your range can function as a warming drawer to keep foods at serving temperature (175°F to 225°F). Place food on the broiler pan in the low position and set the oven control to the lowest setting.

Baking
Follow the recipe instructions when baking. Use correct ingredients, measure them carefully, and use the correct type and size of cookware suggested in the recipe. Remember to preheat properly. Avoid opening of the oven door as much as possible when baking.

When baking cakes in glass baking dishes, lower the oven temperature to 250°F to prevent browning of the bottom and sides before the top becomes brown.

Also when using glass bakeware, it would be better to increase the preheat time to have exact stabilization of the oven's temperature. To do so allow 20 minutes time for temperatures up to 350°F and 30 minutes for temperatures up to 425°F.

Oven Racks

The oven racks should be arranged before the oven knob is operated. Place the racks so the food is centered in the oven, not the rack.

When more than one cookware is used, be sure to stagger them allowing space between each one. Do not allow the cookware to touch any part of the oven, especially the glass window. It is best to use two racks and place food so one cookware is not directly over another.

Rack Removal

Pull the oven rack forward and lift up on the front of the rack so it will clear the rack keeper. To replace the oven rack, guide the angled rear portion of the rack under the rack keeper and slide the rack to the rear.

Never cover the oven racks with aluminum foil. Such practices will trap heat and cause intense heat in spots which usually give poor results. It can damage the porcelain finish as well as glass windows in oven doors.

Removable Oven Bottom

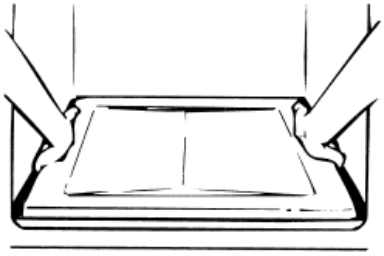

First remove the racks from the oven. The oven bottom lifts from the rear. Grasp each side of the oven bottom and lift upward from the rear until the bottom is clear, lift it to remove from the front.

NOTE: If the oven bottom is replaced incorrectly, it may warp and cause undesirable baking results.

The oven bottom has a porcelain enamel finish. To make cleaning easier, protect the oven bottom from excessive spillovers. This is particularly important when baking a fruit pie or other foods with high acid content. Hot fruit fillings or foods that are acidic in content, such as milk, tomato or sauerkraut, and sauces with vinegar or lemon juice, may cause pitting and damage to the porcelain enamel surface.

To protect the oven bottom surface, place a piece of aluminum foil slightly larger than the baking dish on the rack below to catch any boilovers. It should not completely cover the rack as this would cause uneven heat in the oven.

If a spillover does occur on the oven bottom, allow the oven to cool first. You can clean the bottom with soap and water, a mild abrasive cleanser, soap-filler abrasive pads or an oven cleaner following package directions.

Broiler Compartment

The broiler pan is held in place by a wire broiler rack. To open the broiler, gently lift up and pull forward on the drop down broiler door. Pull the broiler pan forward. It will reach a temporary stop position. Continue to pull forward and the broiler pan will pull out to expose the entire broiler grill surface.

Remove the broiler pan from the broiler rack by lifting up on the front of the broiler pan so it will clear the wire rack. Then pull forward slightly and use both hands to lift the pan free of the rack. To return the pan to the broiler rack, pull the wire rack out to the stop position. Insert the pan into the recessed section of the broiler rack. Slide the pan in place under the pan retainers. Push the pan to the rear of the broiler compartment. Close the broiler door.

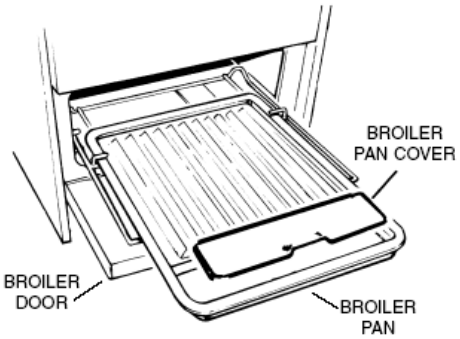

BROILING

Preheat the broiler area and broil pan for a few minutes. No definite time can be given for broiling meats because of varying thickness, amounts of fat, and personal taste. **Be careful when handling hot broiler pans; be careful of the hot grease. Serious injury can result due to spillage of hot grease.** Never leave a dirty broil pan in place, always clean it and return it to the broiler assembly. Unauthorized broil pan substitutes should never be used. Excess fat should be trimmed to reduce the possibility of flame up. The meat could be ruined or fire could occur, causing loss of property and bodily injury. When broiling fatty meats, the lowest broil must be used; however, we recommend the lowest positions at all times. Always broil with the oven door closed. When broiling is completed, turn the dial to OFF and remove the broil pan temporarily for cleaning. Do not use the broiler area for storage of cookware.

DO NOT USE THE BROILER AREA FOR STORAGE OF COOKWARES.

Heavy Spillovers–Unusual Stains

Some spills or food types are harder for the oven to clean without a little assistance. For heavy spillovers such as from an overfilled fruit pie or casserole, put a cookie sheet or aluminum foil on the oven bottom. Be sure the foil does not cover the air openings, so do not extend foil beyond oven bottom.

If you should get a heavy spillover on the oven bottom:

1. Brush off heavy soil with a nylon brush or plastic pad. DO NOT USE paper toweling, cloths or sponge. Oven walls are porous and particles of these materials will rub off on walls. Rinse area well with clean water only. Do not allow insulation under oven bottom to become wet.

2. If spillovers harden before they can be wiped away, they may become either a brittle crust or a varnish-type coating. The brittle crusts will loosen and flake off in time. This process can be speeded up by GENTLY tapping crust with a wooden or plastic cookware and then brushing crust away.

3. Any remaining soil will gradually reduce with continued oven use at normal baking temperatures.

Note: Over a period of time, wear marks may appear on the embossed rack supports. This is normal and results from sliding the oven racks in and out of the oven. Wear marks will not interfere with the overall cleaning action of the oven.

CLEANING THE RANGE

Always keep cleaning materials and chemicals in a safe place and away from children. Know what you are using. Make sure all parts of the range are COOL before cleaning. Be sure to replace the parts correctly.

Knobs

Pull forward on the knobs to remove them. Wash in a water solution with a mild detergent mix. Do not use an abrasive cleaner or any abrasive action. Abrasive action will scratch the knobs.

If the knobs become loose on the valve stem, spread the valve stem slightly with a small screwdriver.

Using Commercial Oven Cleaners

Commercial oven cleaners may be used on porcelain lined ovens; however, many cleaners are very strong, and it's essential to follow instructions carefully. Be sure to wear rubber gloves to protect your hands.

After using such cleaners, thoroughly rinse the oven with a solution of 1 tablespoon vinegar to 1 cup of water. Oven cleaners can coat or damage the thermostat sensing device (the long tube in the oven) so that it will not respond to temperature accurately. If you use an oven cleaner, do not let it contact the sensing bulb, or any chrome, aluminum, or plastic part of the range.

Do not apply or allow the cleaner to come in contact with any parts or surfaces other than the oven interior.

Grates, Main Tops, Surface Burners

The grates are made of porcelain coated steel. These materials can be cleaned at the sink with detergent or soap-filled scouring pads. Do not be alarmed when the grate loses its shining finish. The heat from the burners will cause the grates to lose their shining finish.

Clean the burner with soap and water, rinse thoroughly and dry completely before reassembling. Burner heads can be dried in the oven at about 350 degrees Fahrenheit or in the dishwasher on the dry cycle. After adjustment or cleaning, replace all parts to their original position.

The porcelain finish top can be cleaned with detergent and warm water. A mild glass wax can be used to shine the top.

Products of combustion from the top pilots as well as certain atmospheric conditions can create an oxidation reaction on the underside of the top. This will appear as rust or in the form of a reddish brown deposit. This will NOT AFFECT

THE LIFE OF THE TOP in comparison to the general life expectancy of the range itself.

It is very important that the burner be dry before replacing it in the range. A wet burner will not allow the gas to ignite properly. This could result in a build-up of gas which could result in an explosion or fire.

Aluminum Foil in Oven and Broiler

WARNING

NEVER cover any slots, holes or passages in the oven bottom or cover an entire rack with materials such as aluminum foil. Doing so blocks air flow through the oven and may cause carbon monoxide poisoning. Aluminum foil linings may also trap heat, causing a fire hazard.

Aluminium foil when used improperly is a cause of many range fires. Make certain that vents or air openings aren't covered by the foil. If the vents located along the sides of the oven bottom are blocked, poor cooking will result.

Never cover a rack completely. A piece of foil slightly larger than the cookware can be placed on the rack beneath the cookware.

Remove and discard aluminum foil after each use. This will help prevent greases and spilled food from accumulating and becoming a fire hazard.

Cleaners and Cleaning Materials

Do not use harsh cleaners or degreasers on or around functional parts (valves, controls, etc., or aluminum tubing). This will damage or drastically reduce the life of the part.

Use only a mild solution of soap and water on **backguards, aluminum control panels and painted surfaces**. Never use harsh abrasives or cleaning powders that may scratch or mar the surface. Make sure the cleaners and cleaning materials are suitable for use on the area to be cleaned. Always keep cleaning materials in a safe place. Never use a sharp metal scraper to clean glass, porcelain, or painted surfaces.

Repair Parts

When repair parts are needed, contact the dealer from whom the range was purchased. In case your range was purchased from a source other than an appliance dealer, you may prefer to contact the manufacturer at the address shown in this manual.

Moisture

During the initial heat-up of your range, the heat mixing with the cooler air in the oven cavity may produce fogging of the door glass or a collection of water on the door. To prevent this, open the oven door for the first few seconds of initial oven heat-up. This will allow the moist air within the oven to escape, without the forming of visible moisture on the range. The amount of moisture will depend upon the humidity of the air and water content of the food being cooked. Fogging and even dripping water will usually occur in geographic locations of high humidity.

LIFT-OFF DOORS

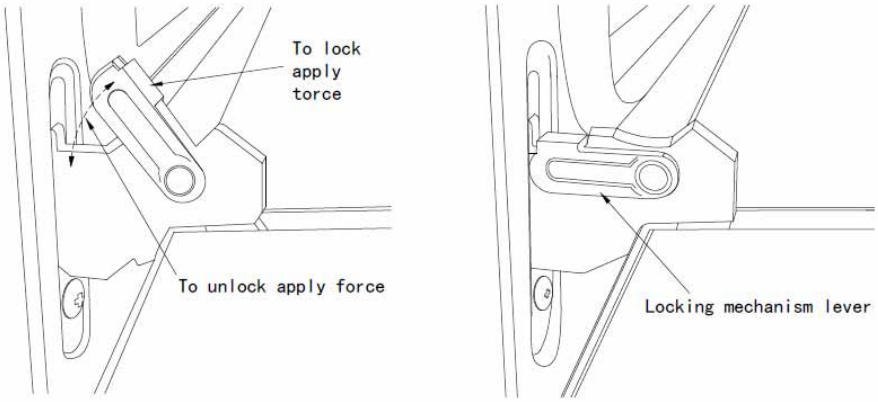

The oven door is removable but it is heavy - you may need help removing and replacing the door.

To remove the door, open it to the full open position. Raise the locking mechanism by applying force to the locking mechanism lever. Needle nose plyers can also be used to lift up on the locking mechanism. Raise the oven door until each locking mechanism lines up with the hinge cut out on the door. Grasp firmly on each side and lift the door straight up and off the hinges.

To replace the door, position the slots in the bottom of the door squarely over the hinges. Then lower the door slowly and evenly over both hinges at the same time. Once at the fully open position, press locking mechanism back in place and close the door.

DO NOT ATTEMPT TO CLOSE THE DOOR UNTIL THIS STEP IS COMPLETE. THE HINGE OR DOOR COULD BE DAMAGED.

HOW TO GAIN ACCESS TO THE BATTERY COMPARTMENT

Gaining access to the battery compartment:

1. Locate the kick plate at the front/bottom of the range
2. The kick plate is clipped into place - simply lift up slightly and pull outwards.
3. Pull away the kick plate. You now have access to the battery compartment

How to change the D volt battery

1. Locate the battery holder which is fastened to the bottom right side of the range
2. Remove D volt battery.
3. Ensure you replace with an Eveready or Duracell brand battery. This will ensure a stronger spark, and reduce the number of times you will have to replace the batteries.

Troubleshooting Guide

Problem	Cause	Correction
1. Surface burner fails to light	a. Clogged burner ports b. Battery dead c. Ignition relay defective	a. Remove burners and clean out dirt and spider webs b. Replace with new D size battery. c. Replace relay
2. Uneven flame	a. Clogged burner ports b. Uneven burner alignment	a. Remove burners and clean out dirt and spider webs b. Check black caps are placed evenly onto burners
3. Oven does not light	a. Oven pilot is out b. Moisture buildup in ceramic sleeve of oven electrode	a. Relight oven pilot b. Heat up ceramic sleeve with BBQ lighter to remove moisture
4. Oven Temperature seems to be inaccurate • Food takes too long to cook • Food cooks too fast • Overbrowning	a. Oven wasn't preheated b. Incorrect use of aluminum foil c. Oven bottom incorrectly in place d. Oven calibration of burner out of adjustment	a. Preheat oven for 10 minutes b. Refer to section on aluminum foil c. Replace oven bottom correctly d. Have technician calibrate oven and adjust burner

Wiring Diagram

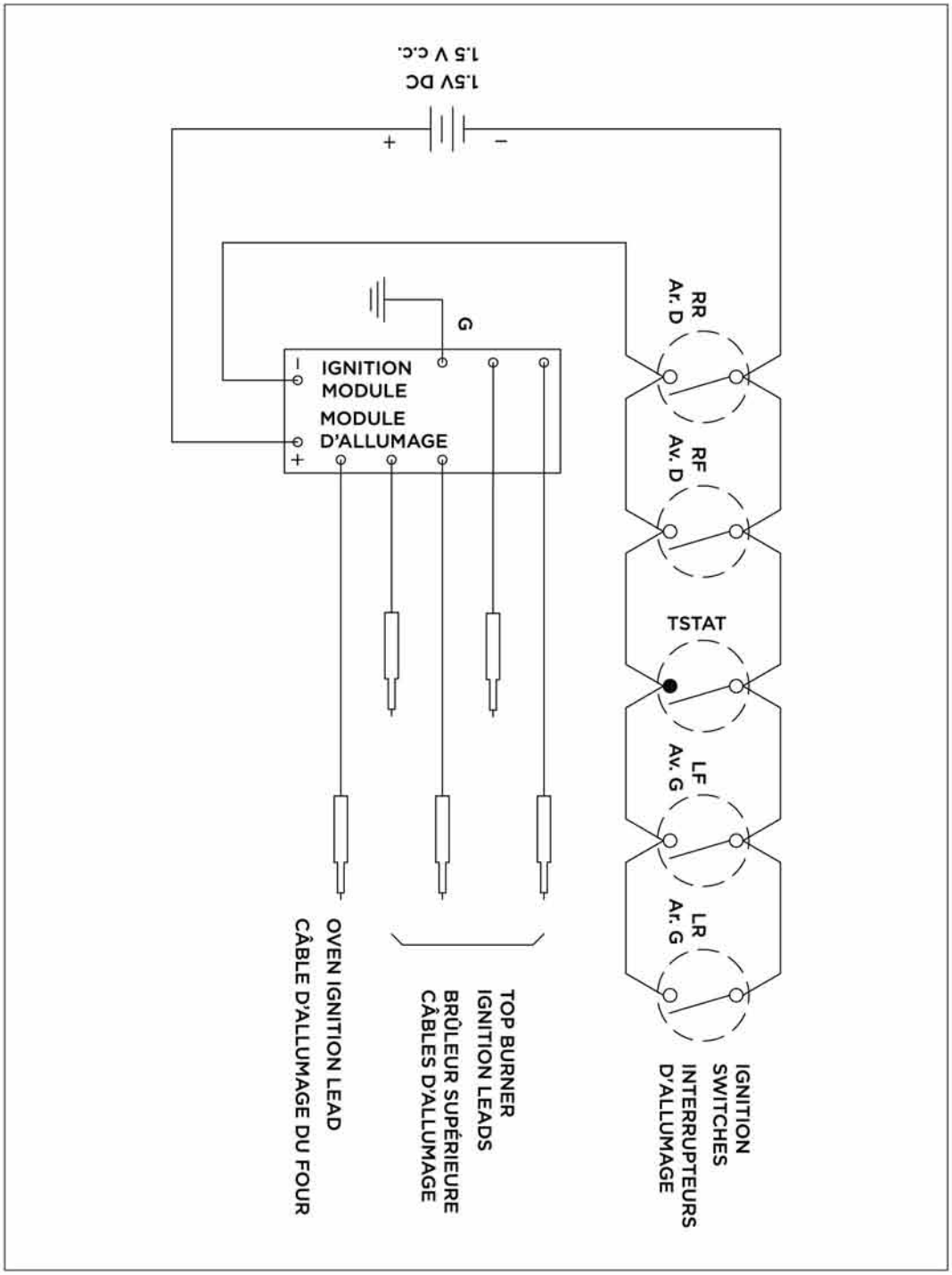

UGP-20G OF1
PARTS DIAGRAM AND LIST

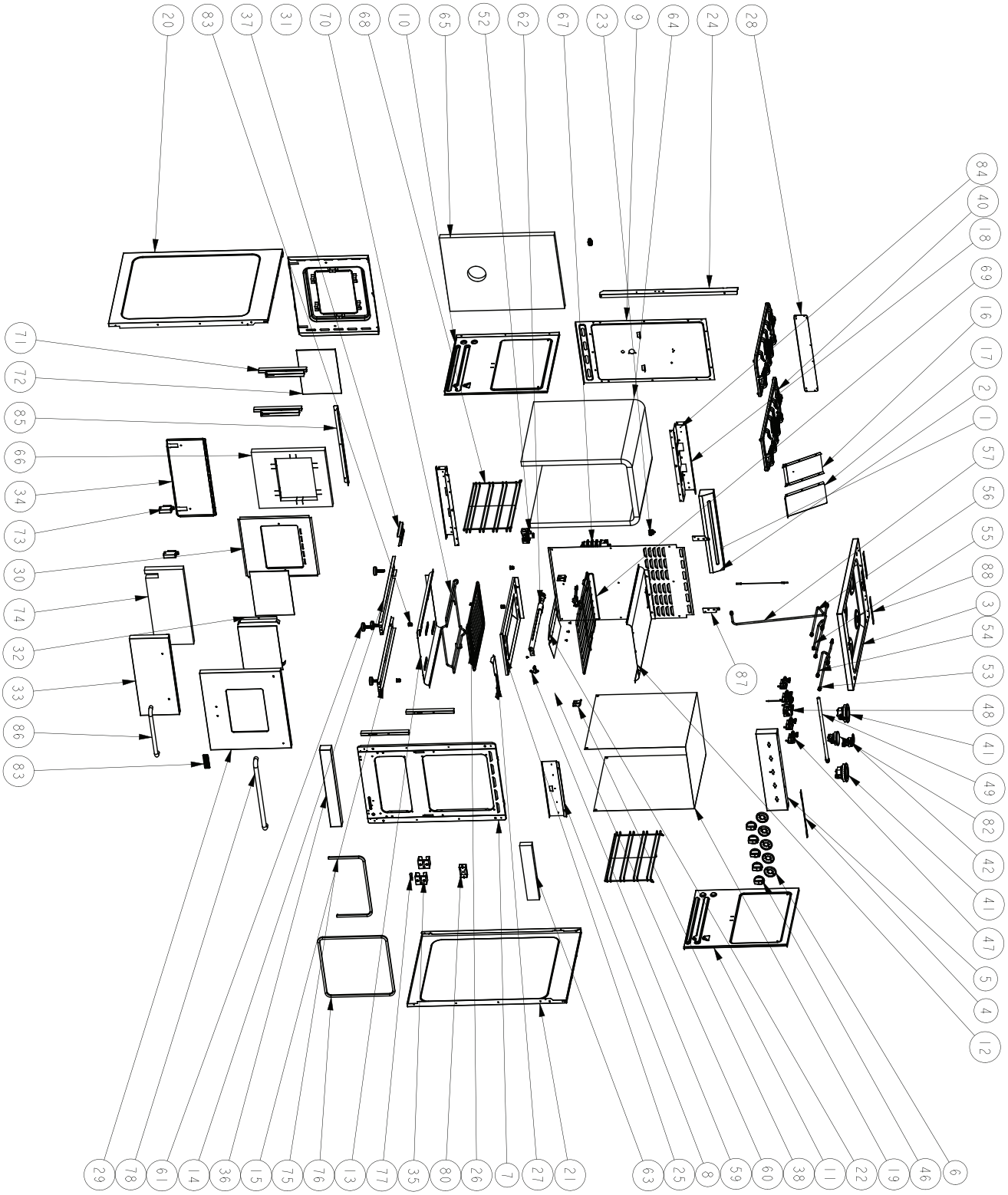

PARTS DIAGRAM AND LIST

Item #	Part #	Description
1	UGP-DWSJ13303	Back splash panel
2	UGP-DCY14491	Back splash panel cover
3	UGP-DWSJ13304	Cooking panel
4	UGP-DCY14226	Cooking panel stop plate
5	UGP-DWSJ13305sy-01	Control Panel
6	UGP-DCY07049	Knob Benzel
7	UGP-DWSJ13306	Liner front panel
8	UGP-DCY14495	Burner fasten beam
9	UGP-DWSJ13307	Liner back panel
10	UGP-DWSJ13241	Liner left panel
11	UGP-DWSJ13242	Liner right panel
12	UGP-DWSJ13308	Liner upper panel
13	UGP-DWSJ13309	Liner bottom panel
14	UGP-DCY14237	Feet fasten beam (left)
15	UGP-DCY14238	Feet fasten beam (right)
16	UGP-DCY14239	Chiminey A
17	UGP-DCY14240	Chiminey B
18	UGP-DCY14499	Liner fasten beam
19	UGP-DCY14500	Liner heat-insulated panel
20	UGP-DWSJ13245	Left panel
21	UGP-DWSJ13246	Right panel
22	UGP-DCY14248	Oven flame spreader
23	UGP-DCY14249	Thermostat clip
24	UGP-DCY14250	Back panel fasten beam
25	UGP-DWSJ13310	Oven floor
26	UGP-DWSJ13311	Broil pan
27	UGP-DWSJ13312	Broil grease cover
28	UGP-DCY14504	Back panel
29	UGP-DWSJ13313	Oven door
30	UGP-DCY14506	Oven door glass faste plate
31	UGP-DWSJ13314	Oven door welding assembly-inner
32	UGP-DCY14261	Oven door fasten plate
33	UGP-DWSJ13315	Broiler door
34	UGP-DWSJ13316	Broiler plate-inner
35	UGP-DCY14266	Bottom decorative panelsupport
36	UGP-DWSJ13317	Bottom decorative panel
37	UGP-DCY14269	Anti tip bracket
38	UGP-DCY14270	Oven rack fixed part
39	UGP-DCY14271	Regulator fixed part
40	UGP-DWWJ01019-2	Cast iron grate with dimplets
41	UGP-DWWJ01294	100 top burner assembly
42	UGP-DWWJ01295	55 top burner assembly
43	UGP-DPJ24001	Nozzle

PARTS DIAGRAM AND LIST

Item #	Part #	Description
44	UGP-DXQJ9902	Ignition needle
45	UGP-DWJ9901	Ignition needle clip
46	UGP-DWWS07001	Knob
47	UGP-DPJ99170	Gas valve
48	UGP-DWWJ01114-4	Thermostat
49	UGP-DWWJ01001-2	Main gas pipe
50	UGP-DWWJ01002	Bellow
51	UGP-DWJ01006	Regulator connect part
52	UGP-DPJ24060	Regulator
53	UGP-DWWJ01003-1	Gas pipe (back right)
54	UGP-DWWJ01004-1	Gas pipe (front right)
55	UGP-DWWJ01005-1	Gas pipe (front left)
56	UGP-DWWJ01006-1	Gas pipe (back left)
57	UGP-DWWJ01316	Liner upper panel
58	UGP-DWWJ01008	Liner bottom panel
59	UGP-DPJ24070	Nozzle seat
60	UGP-DWWJ01325	Pilot Assembly（Pilot, thermocouple, electrode）
61	UGP-DWWJ01010	Feet
62	UGP-DWWJ01317	Burner
63	UGP-DPJ99003-2	Liner front panel insulated fiber
64	UGP-DPJ99004-2	Liner heat-insulated fiber
65	UGP-DPJ99005-2	Liner heat-insulated fiber (back)
66	UGP-DPJ99006-2	Oven door heat-insulated fiber
67	UGP-DXQJ9977-1	Pulse ignitor
68	UGP-DWWJ01011-1	Over Rack Support
69	UGP-DWWJ01012-1	Oven Rack
70	UGP-DWWJ01013-1	Broil pan holder
71	UGP-DWWJ01016-1	Oven door hinge assembly
72	UGP-DQT01003-2	Oven door glass-inner
73	UGP-DWWJ01017	Broiler door hinge
74	UGP-DPJ99007-2	Broiler heat-insulated fiber
75	UGP-DWWJ041018-2	Broiler seal
76	UGP-DWWJ04014-2	Liner seal
77	UGP-DWJ9945-4	Door Magnet
78	UGP-DWWJ01321	Oven Door handle
79	UGP-DCY13432	Door handle base
80	UGP-DWWS90026-1	Battery container
81	UGP-DPJ24009	Earth-ground ignition needle
82	UGP-DWWJ03001	75 top burner assembly
83	UGP-DWWJ03002	LOGO name plate
84	UGP-DCY14325-1	Main gas pipe fixed part
85	UGP-DWSJ13318	Over door top cover
86	UGP-DWWJ01015-2	Broiler door handle
87	UGP-DCY14516	Fasten board
88	UGP-DCY14515	Clip board

UNIQUE UGP 20G RANGE
1 YEAR LIMITED WARRANTY*

Unique Gas Products Ltd. warrants that this UNIQUE range is free from defects in material and workmanship under normal usage and service under the following terms:

Parts Warranty

This appliance has been designed for domestic household use. If properly installed, adjusted and operated under normal conditions in accordance with printed instructions, it will satisfactorily perform the functions that are generally expected of this type of appliance.

If the appliance fails to do so because of a defect in material or workmanship within one year from the original date of purchase:

Unique will at our option, repair, exchange, or correct by other means Unique consider appropriate, any part(s) Unique finds to be defective except for the surface finish. ***Due to remote locations, it is the customer's responsibility to bring items to the dealer for review**. Any part(s) replaced or repaired will be warranted only for the balance of the original year. **Customer is responsible for labor.**

Ownership

This Warranty is made only to the first purchaser ("original purchaser") who acquires this range for his/her own use and will be honored by ***Unique Gas Products Ltd.*** and by the Seller. Purchaser must retain their receipt as proof of purchase date.

Warranty Conditions

This warranty does not apply to any appliance that has been subjected to alterations, misuse, abuse (including damage by foreign agents or chemicals), accident, improper installation or service, delivery damage, or other than normal household use and service.

This UNIQUE appliance ***must*** be serviced regularly as outlined in the Owner's Manual.

Neither Unique Gas Products Ltd. nor the selling dealer will be liable for direct or indirect loss of foods caused by failure in operation. In case of damage, the owner must provide proof of purchase, Model, and Serial Number to the selling dealer or ***Unique Gas Products Ltd.***

This warranty is LIMITED STRICTLY to the terms indicated herein, and no other expressed warranties or remedies thereunder shall be binding on Unique.

Purchaser's Responsibilities

The purchaser will be responsible for the costs of any service calls requested to demonstrate or confirm the proper operation of the appliance, the installation, or to correct malfunctions in the appearance created by the operation of the appliance in a manner not prescribed by or cautioned against in the use and care instructions.

Model and Serial Number

The appliance model number and serial number can be found on a rating plate attached on the floor of the range, at the front, pull out the broiler rack to locate. The purchaser should always refer to the model and serial number when talking to or contacting the dealer from whom the appliance was purchased.

Factory Assistance

If the purchaser is unable to locate an authorized dealer/service agent, or if the purchaser does not receive satisfaction from the dealer, they may contact Unique Gas Products - Customer Service directly at Toll Free 1-877-427-2266 or 905-827-6154

Unique Gas Products Ltd, 2245 Wyecroft Road, Oakville, Ontario, Canada, L6L 5L7
Ph: 905-827-6154 Toll Free: 1-877-427-2266 Fax: 905-827-2027
www.UniqueOffGrid.com
e-mail: info@UniqueOffGrid.com