Shark STRATOS™

CLEAN SENSE IQ Cordless MultiFLEX® Vacuum with DuoClean® PowerFins™ HairPro™ and Odor Neutralizer Technology

IZ800 Series

OWNER'S GUIDE

IMPORTANT SAFETY INSTRUCTIONS

FOR HOUSEHOLD USE ONLY

⚠ WARNING

When using an electrical appliance, to reduce the risk of fire, electric shock, injury, or property damage, basic precautions should always be followed, including the following:

READ ALL INSTRUCTIONS BEFORE USING THIS VACUUM:

1. This vacuum consists of a motorized nozzle, wand, and handheld vacuum. These components contain electrical connections, electrical wiring, and moving parts that potentially present risk to the user. The floor nozzle, wand, and handheld vacuum contain electrical connections.
2. Before each use, carefully inspect all parts for any damage. If a part is damaged, discontinue use.
3. Use only identical replacement parts.
4. This vacuum contains no serviceable parts.
5. Use only as described in this manual. **DO NOT** use the vacuum for any purpose other than those described in this manual.
6. With the exception of the filters and dust cup, **DO NOT** expose any parts of the vacuum to water or other liquids.
7. Keep the appliance and its cord out of reach of children. **DO NOT** allow the appliance to be used by children. **DO NOT** allow to be used as a toy. Close supervision is necessary when used near children.

GENERAL USE

8. This appliance can be used by persons with reduced physical, sensory, or mental capabilities or lack of experience and knowledge if they have been given supervision or instruction concerning use of the appliance in a safe way and understand the hazards involved. Cleaning and user maintenance shall not be made by children.
9. Always turn off the vacuum before connecting or disconnecting any current carrying hoses, motorized nozzles, chargers, batteries, or other electrical or mechanical parts.
10. **DO NOT** handle plug or vacuum with wet hands.
11. **DO NOT** use without dust cup, HEPA and Pre-motor filter, and soft roller in place.
12. Only use Shark® branded filters and accessories. Failure to do so will void the warranty.
13. **DO NOT** put any objects into nozzle or accessory openings. **DO NOT** use with any opening blocked; keep free of dust, lint, hair, and anything that may reduce airflow.
14. **DO NOT** use if nozzle or accessory airflow is restricted. If the air paths or the motorized floor nozzle become blocked, turn the vacuum off. Remove all obstructions before you turn on the unit again.
15. Keep nozzle and all vacuum openings away from hair, face, fingers, uncovered feet, or loose clothing.
16. **DO NOT** use if vacuum is not working as it should, or has been dropped, damaged, left outdoors, or dropped into water.
17. Use extra care when cleaning on stairs.
18. **DO NOT** leave the vacuum unattended while powered on.
19. When powered on, keep the vacuum moving over the carpet surface at all times to avoid damaging the carpet fibers.
20. **DO NOT** place vacuum on unstable surfaces such as chairs or tables.
21. **DO NOT** use to pick up:
    a) Liquids
    b) Large objects
    c) Hard or sharp objects (glass, nails, screws, or coins)
    d) Large quantities of dust (including drywall, fireplace ash, or embers). **DO NOT** use as an attachment to power tools for dust collection.
    e) Smoking or burning objects (hot coals, cigarette butts, or matches)
    f) Flammable or combustible materials (lighter fluid, gasoline, or kerosene)
    g) Toxic materials (chlorine bleach, ammonia, or drain cleaner)
22. **DO NOT** use in the following areas:
    a) Poorly lit areas
    b) Wet or damp surfaces
    c) Outdoor areas
    d) Spaces that are enclosed and may contain explosive or toxic fumes or vapors (lighter fluid, gasoline, kerosene, paint, paint thinners, mothproofing substances, or flammable dust)
23. Turn off the vacuum before plugging in or unplugging the charger.
24. Turn off the vacuum before any adjustment, cleaning, maintenance or troubleshooting.
25. During cleaning or routine maintenance, **DO NOT** cut anything other than hair, fibers, or string wrapped around the brushrolls.
26. Allow all filters to air-dry completely before replacing in the vacuum to prevent liquid from being drawn into electric parts.
27. **DO NOT** modify or attempt to repair the vacuum or the battery yourself, except as indicated in this manual. **DO NOT** use the battery or vacuum if it has been modified or damaged. Damaged or modified batteries may exhibit unpredictable behavior resulting in fire, explosion, or risk of injury.
28. Always turn off this appliance before connecting or disconnecting motorized nozzle or hand tool.

BATTERY PACK

29. The battery is the power source for the vacuum. Carefully read and follow all charging instructions.
30. To prevent unintentional starting, ensure the vacuum is powered off before picking up or carrying the vacuum. **DO NOT** carry the appliance with your finger on the power switch.
31. Use only Shark® charger DK024-288080H-U or YLS0243A-T288080 for single batteries and DK482-288080U or YLS0483A-T2880802 for dual battery packs. Use of an incorrect charger may result in no charging, and/or unsafe conditions. A charger that is suitable for one type of battery pack may create a risk of fire when used with another battery pack.
32. Keep the battery away from all metal objects such as paper clips, coins, keys, nails, or screws. Shorting the battery terminals increases the risk of fire or burns
33. Under abusive conditions, liquid may be ejected from the battery. Avoid contact with this liquid, as it may cause irritation or burns. If contact occurs, flush with water. If liquid contacts eyes, seek medical help.
34. Battery should not be stored at temperatures below 3°C (37.4°F) or above 104°F (40°C) to maintain long-term battery life.
35. **DO NOT** charge battery at temperatures below 5°C (40°F) or above 104°C (104°F). Charging improperly or at temperatures outside of the specified range may damage the battery and increase the risk of fire.
36. Store the appliance indoors. **DO NOT** use or store it below 3°C (37.4°F). Ensure the appliance is at room temperature before operating.
37. **DO NOT** expose the battery to fire or temperatures above 265°F (130°C) as it may cause explosion.
38. Use appliances only with specifically designated battery packs. Use of any other battery packs may create a risk of injury and fire.
39. Disconnect the battery pack from the appliance before making any adjustments, changing accessories, or storing appliance. Such preventive safety measures reduce the risk of starting the appliance accidentally.
40. For IZ840H, IZ841H, IZ842H, IZ862H, IZ863H, IZ864H, IZ882H use only with Shark battery pack XBATR725SL.
41. If the charging cord plug does not fit fully into the outlet, reverse the plug. If it still does not fit, contact a qualified electrician. **DO NOT** force into outlet or try to modify to fit.
42. To reduce the risk of shock and unintended operation, turn off power and remove the Li-Ion battery before servicing.

ODOR

43. Observe the following when interacting with the odor neutralizing cartridge:
    a) **DO NOT** attempt to disassemble odor neutralizing cartridge.
    b) Avoid direct contact with the fragrance pod in the cartridge.
    c) **DO NOT** directly inhale from the odor neutralizing cartridge.
    d) Keep away from children and pets.
    e) Keep away from heat, sparks, and open flame.
    f) **DO NOT** place in direct sunlight.

    FRAGRANCE CARTRIDGE FIRST AID

    a) Avoid contact with fabrics and finished surfaces.
    b) Eye contact: Remove contact lenses if present. Rinse continuously with water for several minutes.
    c) Skin contact: Wash hands thoroughly after handling. If irritation or rash develops, seek medical advice/attention.
    d) Inhalation: Move person to fresh air if they are experiencing any respiratory symptoms. If symptoms persist, seek medical advice/attention.
    e) Ingestion: **DO NOT** induce vomiting. Seek medical advice/attention.

SAVE THESE INSTRUCTIONS

sharkclean.com

ASSEMBLY

1. Insert **Wand** into **Floor Nozzle**.
2. Insert **Handheld Vacuum** into wand.
3. Remove **Odor Neutralizer Technology Dial** from bag. Flip up the dial handle, align the teal arrows, then insert the dial into the nozzle.

For proper operation, ensure all components are completely connected and clicked into place.

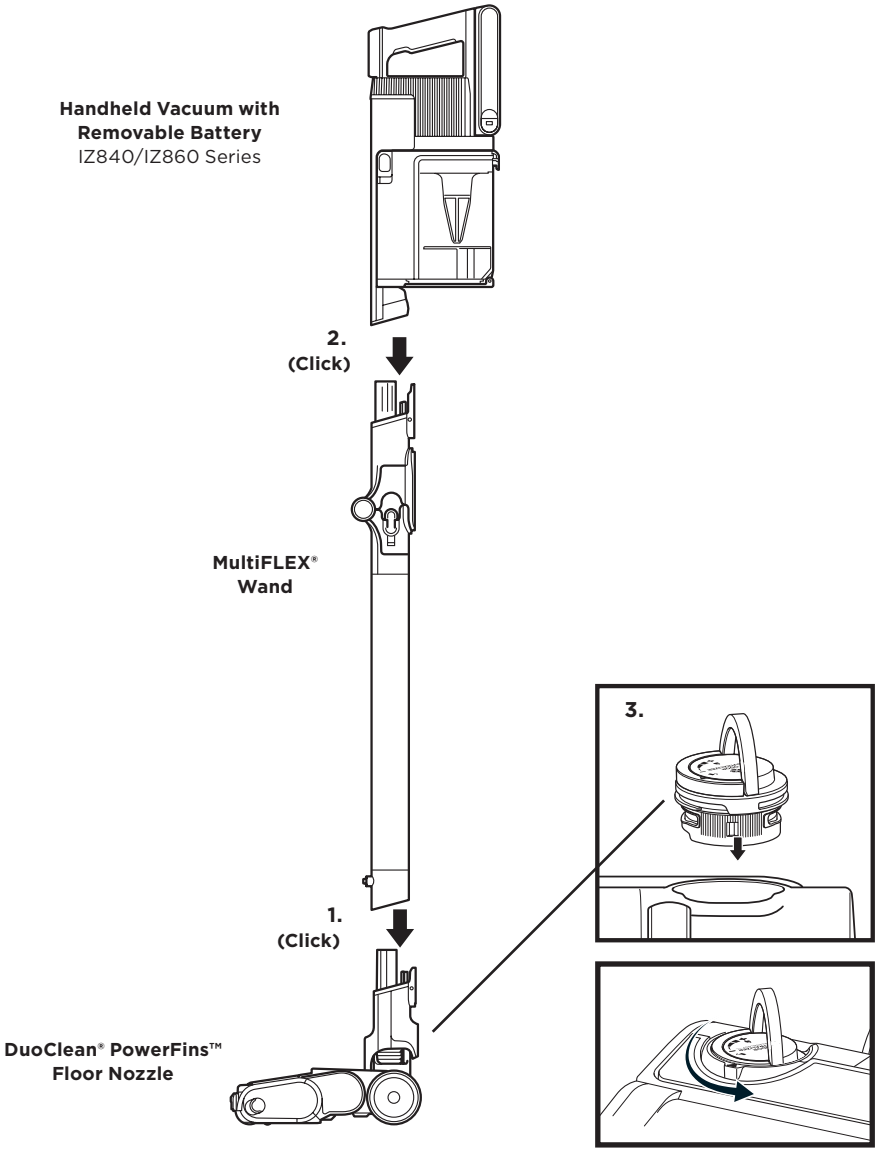

LI-ION BATTERY

The Lithium-Ion Power Pack battery does not come fully charged. Prior to first use, charge completely. During first use, run the battery down until it is completely out of power. This will condition the battery.

LED BATTERY POWER AND CHARGING INDICATORS

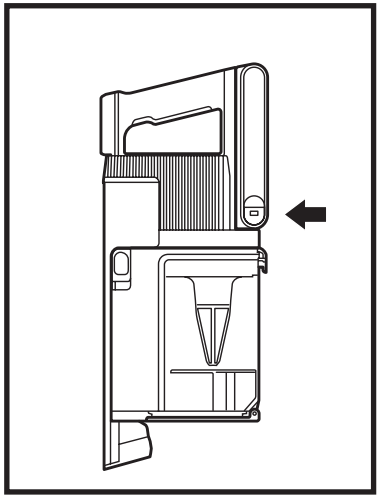

Charging

- **LED will pulse white when reaching 100% charge.**
- **LED will pulse green from 76% - 99% charge.**
- **LED will pulse yellow from 0 - 75% charge.**
- **No LED the battery pack is off**

NOTE: *Full charge takes approximately 3.5 hours.*

Additional Notes

1. LEDs turn off once the battery is fully charged.
2. Unit will not power on when charger is connected.

ABOUT YOUR ION POWER PACK BATTERY

This product uses a lithium-ion rechargeable and recyclable battery. When the battery no longer holds a charge, it should be removed from the vacuum and recycled. **DO NOT** incinerate or compost the battery. When your Lithium-Ion Power Pack Battery needs to be replaced, dispose of it or recycle it in accordance with local regulations. In some areas, it is illegal to place spent lithium-ion batteries in the bin or in a municipal solid waste stream. Return spent power packs to an authorized recycling center or to retailer for recycling. Contact your local recycling center for information on where to drop off the spent power pack.

SUCTION POWER MODES

SUCTION MODE DISPLAY LIGHTS

ECO Mode
Maximum runtime. Saves battery power.

CLEAN SENSE IQ **Clean Sense IQ Mode**
Best balance between suction power and optimized runtime. Best used on carpet AND hard floor.

Boost Mode
Maximum suction. Uses the most battery power.

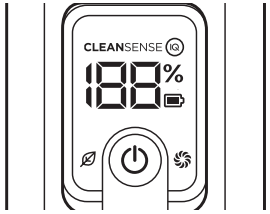

Battery Runtime

MODE	MINUTES IZ840H IZ862H
Hand Vac – ECO Mode	60
Boost Mode (Hand Vac)	10

Clean Sense IQ runtime depends on individual use and amount of debris on cleaning surfaces.

Suction mode impacts runtime. Use Boost in short bursts.

CHARGING THE BATTERY

USING THE LI-ION CHARGER

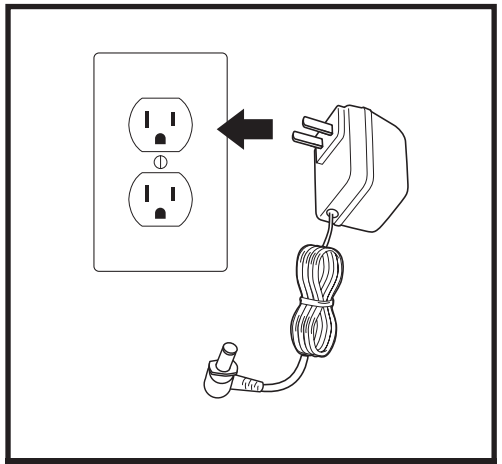

LI-ION CHARGER

Plug the **Li-Ion Charger** into a wall outlet.

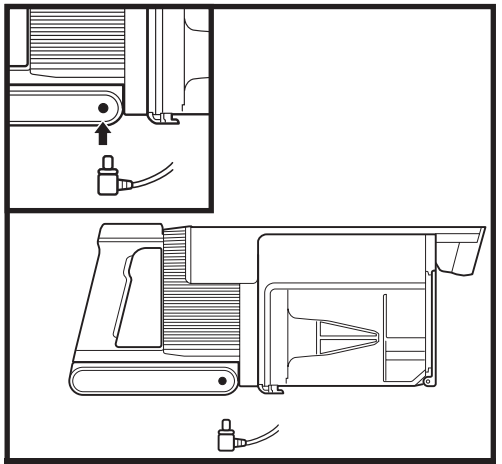

IN HANDHELD VACUUM

To charge the battery inside the handheld vacuum, connect the charger to an electrical outlet, then insert the charger plug into the port below the handle on the handheld vacuum.

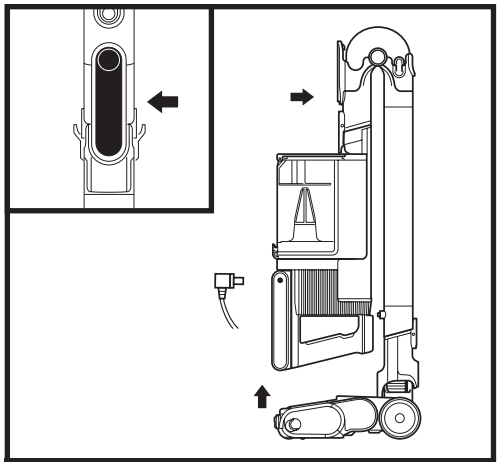

IN THE VACUUM: MULTIFLEX®

To put the vacuum in storage mode, press the **MultiFLEX Wand Unlock Latch** while folding the handheld vacuum forward until the wand clicks and locks. Plug the charger into the charging port on the handheld vacuum.

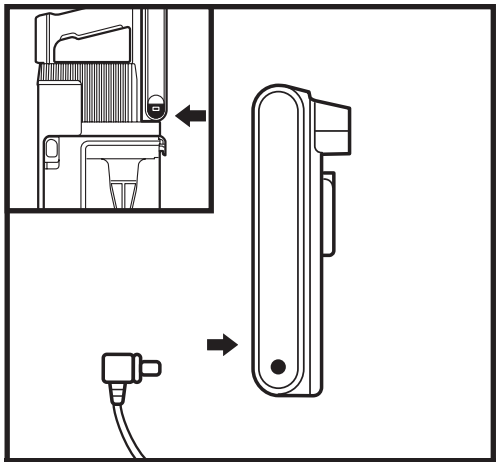

OUT OF THE VACUUM

Press and hold the **Battery Release Button,** then pull out the battery. Plug the charger into the charging port on the battery. To reinstall the battery, insert it into the slot in the back of the handheld vacuum.

SETTINGS

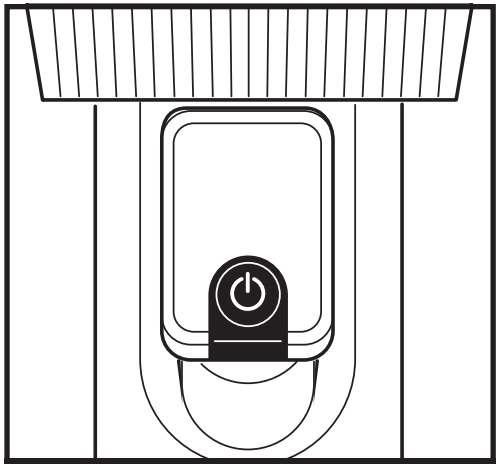

POWER ON/OFF

Press power button to turn vacuum on or off.

NOTE: The unit will not turn on if the charger is connected. Unplug the charger before turning on vacuum power.

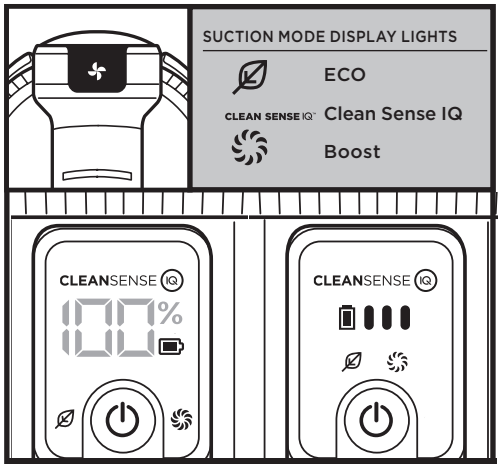

SUCTION POWER MODES

Press the (✣) button to toggle between ECO, Clean Sense IQ, and Boost modes. To save battery power, select ECO mode. For everyday cleaning power, select Clean Sense IQ mode. For an extra burst of power, select Boost mode.

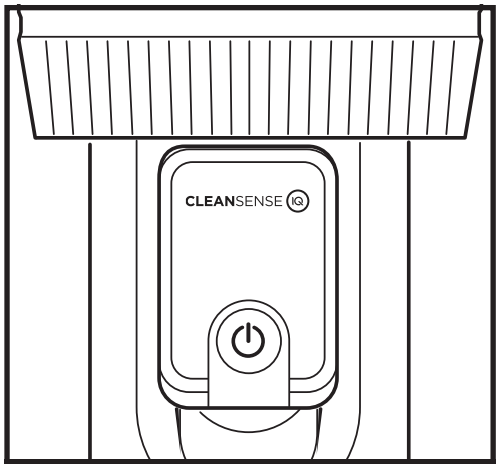

CLEAN SENSE POWER MODE

Clean Sense IQ senses the dirt you can't see and automatically boosts power. Clean Sense IQ mode modifies cleaning performance based on the mess at hand, giving you optimal suction and runtime when heavy or light debris is detected.

CLEAN SENSE IQ INDICATOR

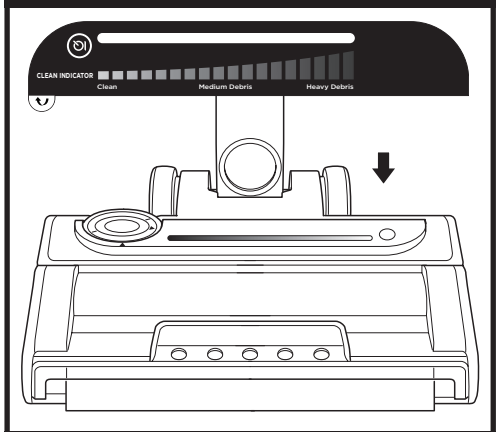

CLEAN INDICATOR

The **Clean Indicator** visually confirms when floors are clean. When the unit senses heavy debris, suction will increase for more cleaning power. When the debris is cleared, suction will decrease. The clean indicator displays the level of debris detected. For best results, continue cleaning until the indicator returns to its lowest level before moving to the next area.

TECHNOLOGY SETTINGS

SETTINGS

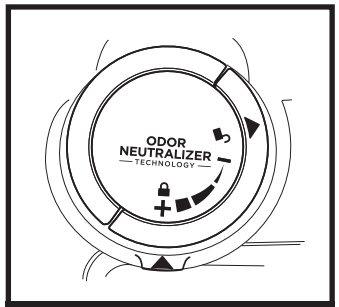

ODOR DIAL

Flip up the dial handle and rotate the odor dial to adjust odor neutralizer technology intensity or to unlock the dial for cartridge access.

Insertion/Removal: Rotate the odor dial to align the teal arrows. Remove the dial to access the odor cartridge for removal or replacement.

Low: Rotate the dial toward the Low position (-) to decrease the intensity to the lowest level when the vacuum is in use.

High: Rotate the dial toward the High position (+) for the highest intensity level when the vacuum is in use. This position is the recommended setting for optimal performance.

ODOR NEUTRALIZER TECHNOLOGY TIPS

Odor Dial Must be Installed for Vacuum to Function Properly

• Remove odor cartridge from dial if you don't want the benefits of the odor neutralization technology.

Maintenance Required

• Clean all filters as recommended under Cleaning Filters.
• Empty the dust cup before storing your vacuum.
• Replace the cartridge as recommended under Odor Cartridge Replacement.
• Visit qr.sharkclean.com/odortech to learn more and purchase replacements.
• If wet messes are cleaned up, thoroughly clean the vacuum.

Fragrance Strength Over Time

• The intensity of the odor neutralizer technology's fragrance may diminish over time. It may also have no noticeable fragrance at all. This is natural and does not indicate the technology isn't working. Follow replacement instructions to ensure continued performance.

NOTES: • The odor dial needs to be installed for the vacuum to function properly, with or without the odor cartridge.
• Odor Neutralizer technology effectively deodorizes while interacting with odors from inanimate sources.

ODOR NEUTRALIZER TECHNOLOGY

ODOR CARTRIDGE REPLACEMENT

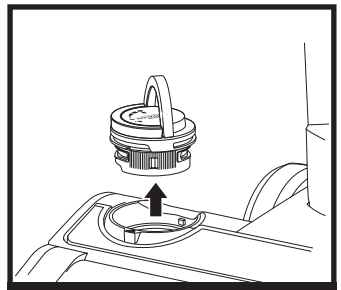

1. REMOVE ODOR DIAL FROM NOZZLE

Flip up the handle and rotate the dial clockwise until the two teal arrows are aligned. Pull the handle to remove the dial from the nozzle.

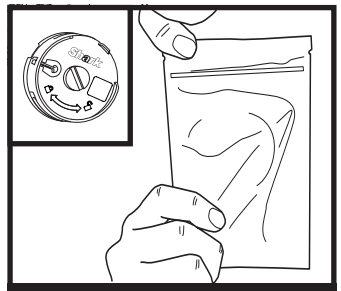

3.REMOVE NEW CARTRIDGE FROM BAG

Remove the new odor cartridge from the sealed packaging. To maintain the life of the cartridge, keep it in the sealed packaging until you are ready to install it.

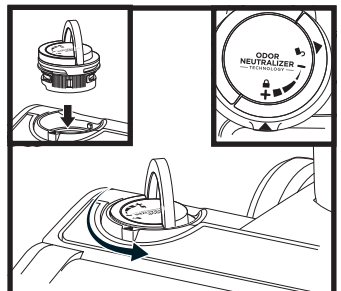

5. INSTALL DIAL IN NOZZLE

Align the teal arrow on the dial cover with the teal arrow on the nozzle, then reinsert the dial into the nozzle. Rotate the dial counterclockwise until it clicks into an intensity setting to engage. Rotate further to change the intensity setting.

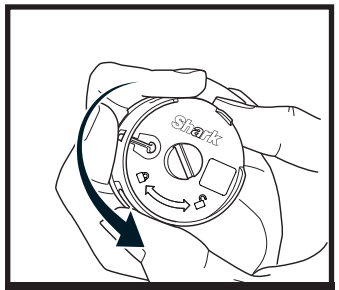

2. REMOVE OLD ODOR CARTRIDGE

Rotate the cartridge counterclockwise in the dial housing and pull out the cartridge to remove it.

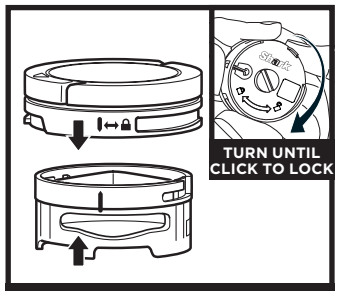

4. INSTALL NEW CARTRIDGE IN DIAL

Align the yellow arrow on the side of the cartridge with the yellow arrow on the side of the dial cover, then insert the cartridge into the dial. Rotate the cartridge clockwise to lock it in place.

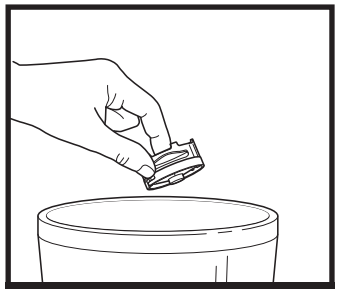

6. USED CARTRIDGE DISPOSAL

Dispose of the old cartridge by dropping it into the trash.

NOTE: Odor cartridges should be replaced every 6 months for optimal odor neutralizer technology performance.

CLEANING MODES

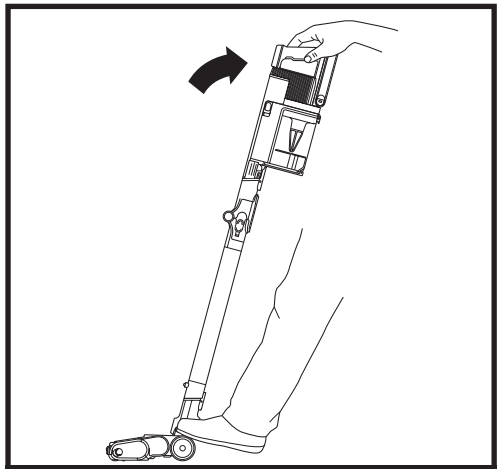

UPRIGHT MODE

To clean floors, step on floor nozzle and tilt handheld vacuum back.

NOTE: Brushrolls will only engage when the handheld vacuum is tilted back and the nozzle swivel is unlocked.

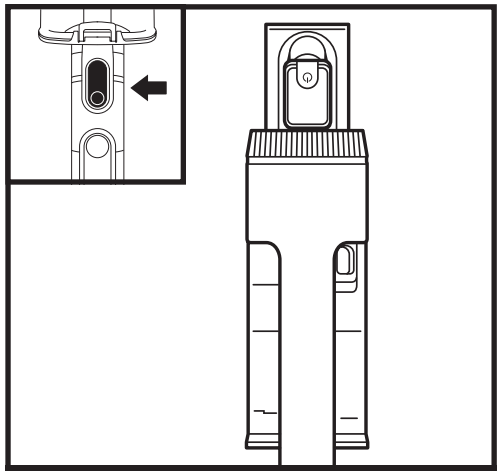

ABOVE-FLOOR HANDHELD

Press the wand release button and lift the handheld vacuum off the wand. Attach an accessory for great cleaning on stairs, furniture, and other above-floor areas.

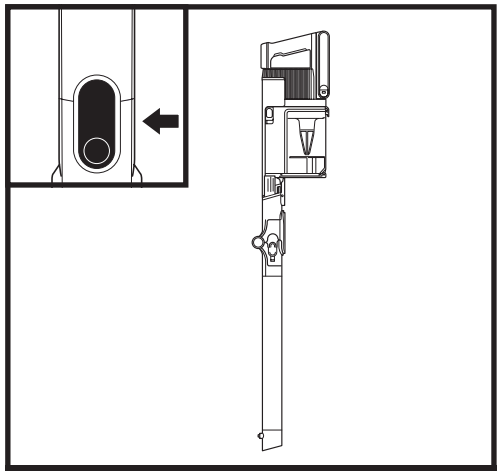

ABOVE-FLOOR WITH WAND

Stand the vacuum upright and press the nozzle release button located at the bottom of the wand, above the nozzle. Lift wand to detach. Great for cleaning baseboards, ceiling fans, window sills, and other hard-to-access areas.

NOTE: All accessories are compatible with both the wand and the handheld vacuum.

USING THE MULTIFLEX® WAND

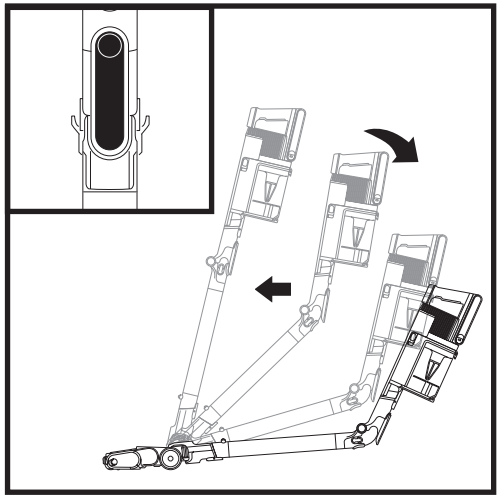

Press the unlock latch on the back of the wand, then adjust the angle.

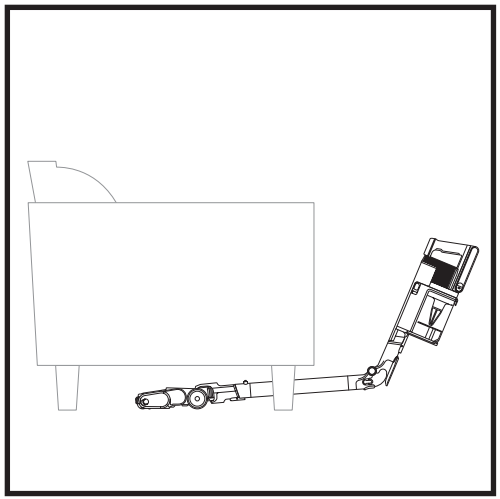

Adjust the wand to a lower angle to easily clean under furniture.

MULTIFLEX STORAGE

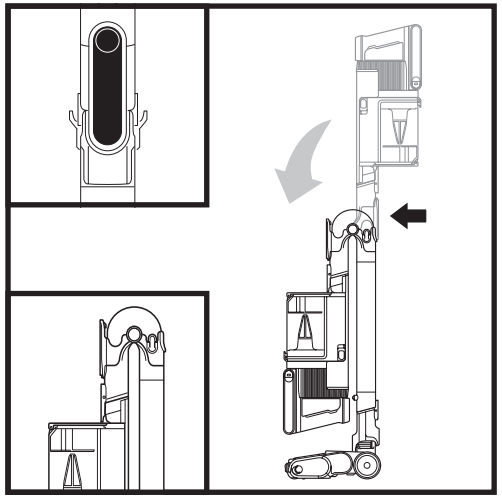

To put the vacuum in storage mode, press the unlock latch while folding the handheld vacuum forward.

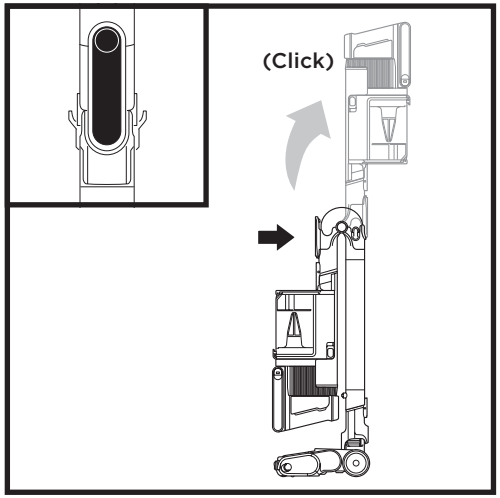

To take the vacuum out of storage mode, press the unlock latch and lift up the handheld vacuum until the wand clicks and locks into place.

EMPTYING THE DUST CUP

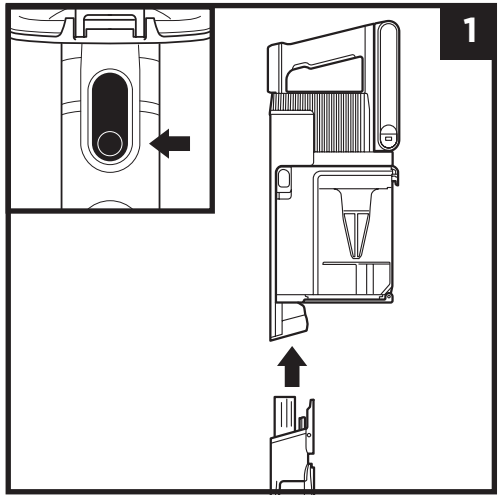

Press the wand release button to detach the handheld vacuum from the wand.

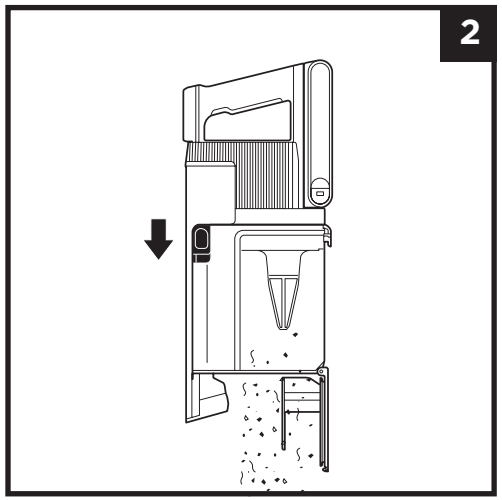

To empty the **Dust Cup** while it is attached to the handheld vacuum, position the dust cup over a trash receptacle and slide the **CleanTouch™ Dirt Ejector** slider forward.

REMOVING AND CLEANING THE DUST CUP

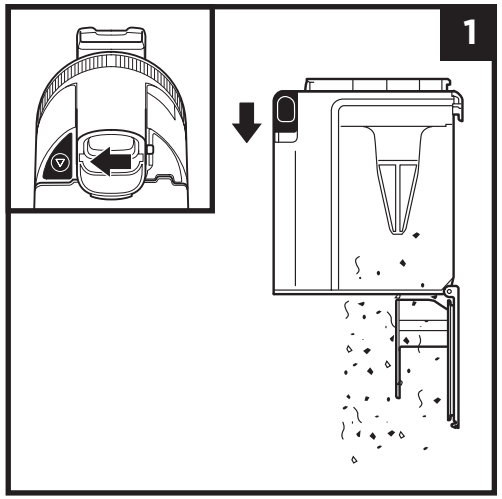

To remove the dust cup from the handheld vacuum, press the **CleanTouch Dust Cup Release** button near the handheld vacuum nozzle. Tilt the dust cup and lift off to remove.
To empty dust and debris, hold the dust cup over the trash receptacle, then slide the CleanTouch Dirt Ejector slider forward.

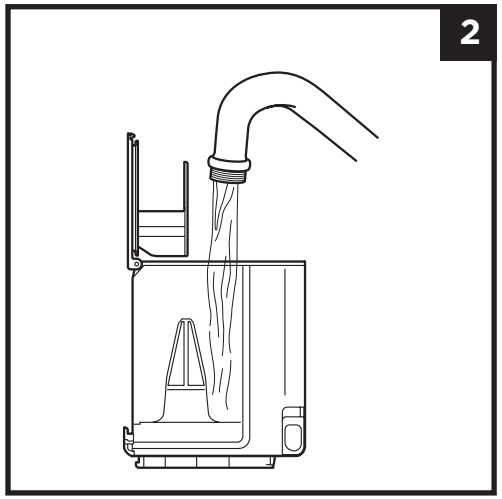

To clean the interior of the dust cup, rinse it with water. Place it on its side with the lid open to air-dry for at least 48 hours before reinstalling.

CLEANING THE FILTERS

Regularly rinse and replace the filters to maintain your vacuum's suction power and to maximize the effectiveness of odor neutralization.

To clean filters, rinse them with water only. **Allow all filters to air-dry completely for up to 48 hours before reinstalling to prevent liquid from being drawn into electric parts.**
Clean the pre-motor filters at least once a month and post-motor HEPA filter at least once a year. Tap off loose dirt between washes when needed. More frequent cleaning may sometimes be necessary with heavy use.

IMPORTANT: DO NOT use soap when cleaning the filters. Use water only. The vacuum will not have suction if the post-motor HEPA filter is not installed. Ensure that all filters are installed before using.

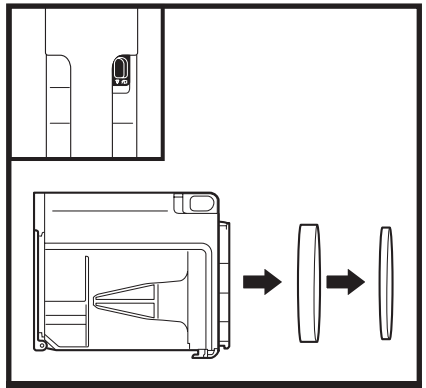

PRE-MOTOR FILTERS

Remove the dust cup, and pull the foam and felt filters out of the back of the dust cup.

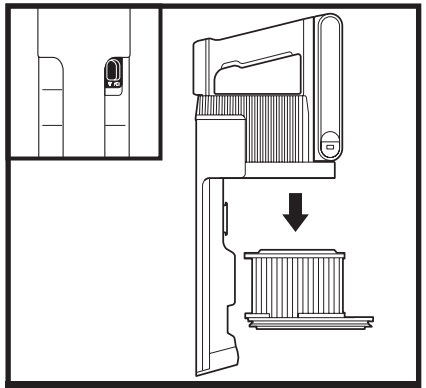

POST-MOTOR FILTER

Remove the dust cup. Pull the post-motor filter out of the handheld vacuum.

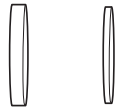

Pre-Motor Foam and Felt Filter Kit

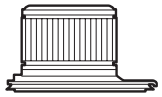

Post-Motor HEPA Filter

FLOOR NOZZLE

If any hair is wrapped around the brushrolls, continue cleaning using the Carpet setting on a bare floor surface, a low-pile carpet, or a small area rug. If some fibers remain wrapped around the brushrolls after continued use, carefully remove them. If you run over a hard or sharp object or notice a change in noise while vacuuming, check the floor nozzle for blockages. (See the Checking for Blockages in the Floor Nozzle section.)

CLEANING SOFT ROLLER

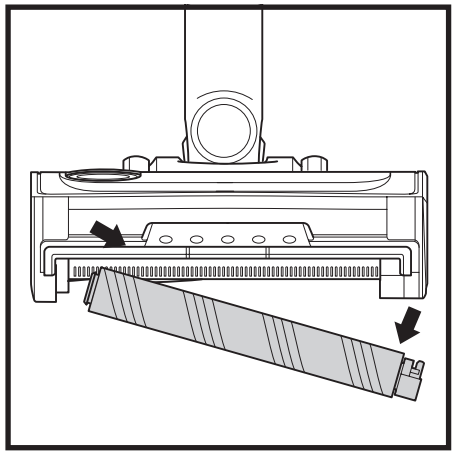

1 To remove Soft Roller from nozzle, pull the Soft Roller out by the tab.

2 Tap loose debris off the Soft Roller. Use a dry towel to wipe the Soft Roller clean and to remove any debris caught in the teeth behind the Soft Roller.

3 Hand wash the Soft Roller as needed. Use only water, and let air-dry completely, which should take at least 24-48 hours.

4 Reinsert Soft Roller until you feel it click into place.

CLEANING THE SENSORS

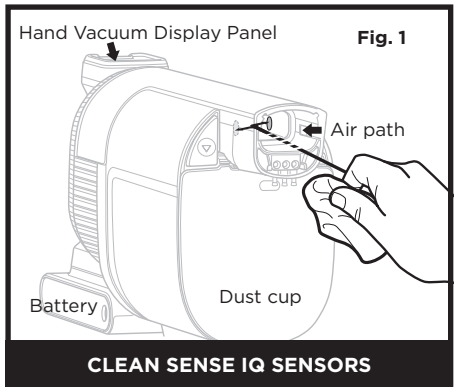

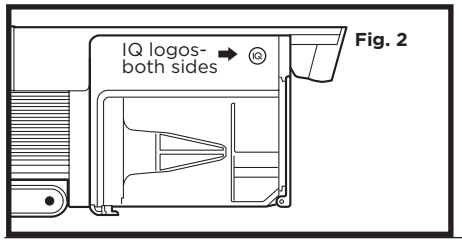

Make sure to clean the sensors inside the hand vacuum regularly, as hair and other debris may build up and obstruct them. If the sensors are partially obstructed, Clean Sense IQ mode will not adjust suction levels as expected. If the sensors are completely obstructed, the F0 error code will appear and the Clean Sense IQ icon will flash on the hand vacuum display panel.

To clean the sensors:

1. Turn off power and remove the hand vacuum.
2. Locate the sensors inside the nozzle of the hand vacuum. The sensors are on the interior walls of the nozzle, about 3 inches down the air path, aligned with the IQ logos (Fig.2) on the exterior.
3. Gently wipe the sensors with a microfiber cloth and remove all hair and debris.
4. Turn on power and verify that the unit is functioning normally.

CHECKING FOR BLOCKAGES

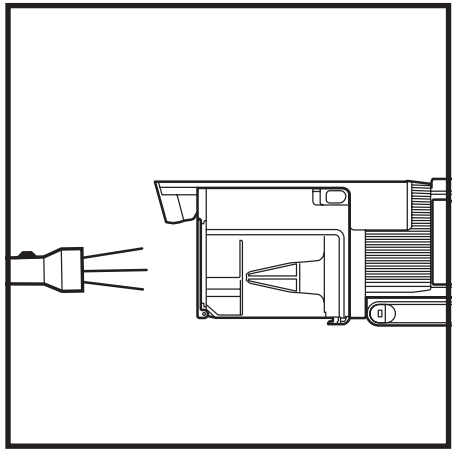

Checking for Blockages in the Handheld Vacuum:

1. Turn off vacuum.
2. Remove the handheld vacuum from the wand.
3. Check all intake openings on the dust cup and remove any debris or blockage.

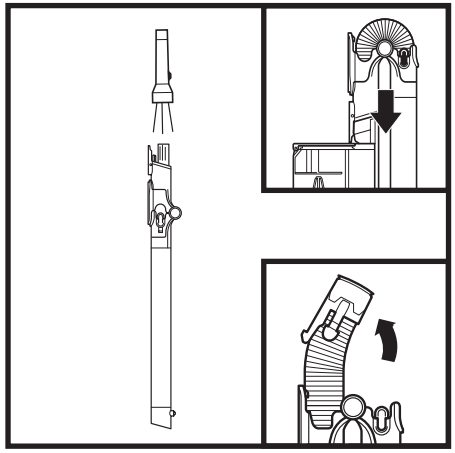

Checking for Blockages in the Wand:

MultiFLEX® Wand:

1. Turn off vacuum.
2. Remove the handheld vacuum and floor nozzle from the wand.
3. Check the **Clog Access Hose** on the MultiFLEX section of the wand by pinching the tabs on both sides of the hose and lifting the hose out.
4. Clear any debris and blockages.

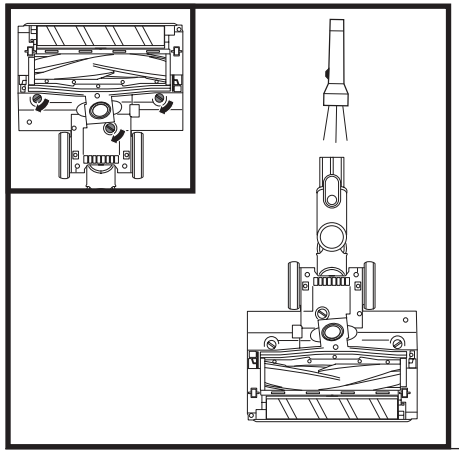

Checking for Blockages in the Floor Nozzle:

1. Turn off vacuum.
2. Detach the wand.
3. Use the edge of a coin to open the three locks on the bottom of the floor nozzle.
4. Remove the cover and tilt back the neck of the floor nozzle.
5. Check the opening and remove any debris.
6. Replace the cover by sliding the inserts into the slots, then pressing down firmly on all sides. Turn the locks clockwise to close, until they click securely into place.

TROUBLESHOOTING GUIDE

WARNING: To reduce the risk of shock and unintended operation, turn off power and remove the Lithium-Ion Power Pack battery before servicing.

Vacuum is not picking up debris. No suction or light suction. Filter icon on handheld vacuum control panel is red. (Refer to Checking for Blockages section for more information.)

- Check filters to see if they need cleaning. Follow instructions for rinsing and completely air-drying the filters before reinserting in the vacuum.
- Dust cup may be full; empty dust cup.
- Check floor nozzle for blockages; clear blockages if required.
- Remove any string, carpet fibers, or hair that may be wrapped around the brushrolls.
- Check clog access hose in wand for any blockages and clear any debris.
- Check connectors between handheld, wand, and floor nozzle for debris. Remove any dust or material in the connectors.
- If the issue persists, please contact Customer Service at 1-800-798-7398.

Vacuum lifts area rugs.

- Make sure you are not engaging Boost mode as this can be too much suction for lighter rugs. Take care when vacuuming area rugs or rugs with delicately sewn edges.
- Turn off the unit to disengage the brushrolls and press the power button to restart.

Brushrolls do not spin.

- Immediately turn off the vacuum. Remove any blockages before turning the vacuum back on. Make sure the handheld vacuum is tilted back far enough for the brushrolls to engage. If the brushrolls still do not spin, please contact Customer Service at 1-800-798-7398.
- If the floor nozzle has headlights and they are not illuminated, there is a connection issue between the handheld vacuum, wand, and nozzle. Try disconnecting and reattaching the pieces. If the headlights still do not illuminate, please contact Customer Service at 1-800-798-7398.

Vacuum turns off on its own.

There are several possible reasons for the vacuum turning off on its own, including blockages, battery issues, and overheating. If vacuum turns off on its own, perform the following steps:

1. Turn on the vacuum and check the battery indicator lights located on the handheld vacuum. If recharging is needed, make sure power is turned off before connecting to the charger.
2. Empty dust cup and clean filters (see Emptying the Dust Cup and Cleaning the Filters sections).
3. Check wand, accessories, and inlet openings and remove any blockages.
4. Allow unit and battery to cool for at least 45 minutes, until they return to room temperature.
5. Press power button to restart the vacuum. Make sure the charger is not plugged into the port on the handheld vacuum.

Vacuum is emitting air that smells bad.

- Dust cup may be full; empty dust cup. Empty dust cup after each use for optimal odor neutralizer technology performance.
- Check filters to see if they need cleaning. Follow instructions for rinsing and air-drying the filters before reinstalling them.
- Check to make sure odor cartridge is installed in the dial and the dial is installed in the nozzle.
- Check the odor neutralizer technology dial on the nozzle to see what setting is enabled.
- If odor neutralizer technology dial is at any setting from Low to High and the cartridge has been installed for 6 months or longer, consider replacing it.
- If the odor cartridge is still emitting a scent but you dislike it, consider turning the intensity down, or reinstall the dial in the nozzle without the cartridge.
- If the odor neutralizer technology cartridge is not emitting a scent, consider replacing it.

For all other issues, please call Customer Service 1-800-798-7398.

NOTE: If vacuum still does not operate properly, contact Customer Service at 1-800-798-7398.
For more troubleshooting help and FAQs, visit sharkclean.com/support.

TROUBLESHOOTING GUIDE

	Fault	Error code display on
Motor	Motor No Start	10
	Motor Overheat	20
	Motor Overcurrent	30
	Motor Short	40
	Motor Overspeed	50
	System Comm Error	60
	Clean Sense IQ Sensor Blockage	F0
Nozzle	Nozzle Overheat	70
	Nozzle Short	E0

ADDITIONAL ACCESSORIES AVAILABLE ON SHARKACCESSORIES.COM

- **A 8″ Crevice Tool**
- **B 18″ Flexi Crevice Tool**
- **C Duster Crevice Tool**
- **D Dusting Brush**
- **E Multi-Angle Dusting Brush**
- **F Anti-Allergen Dust Brush**
- **G Upholstery Tool**
- **H Wide Upholstery Tool**
- **I Pet Multi-Tool**
- **J Deep-Cleaning Motorized Pet Tool**
- **K MultiFLEX® Under-Appliance Wand**
- **L Accessory Bag**
- **M Li-Ion Charger**
- **N Dual Li-Ion Charger**
- **O Li-Ion Battery**

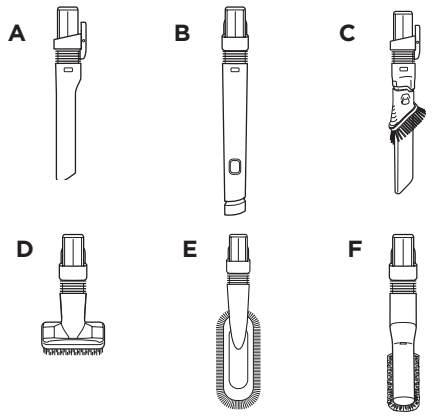

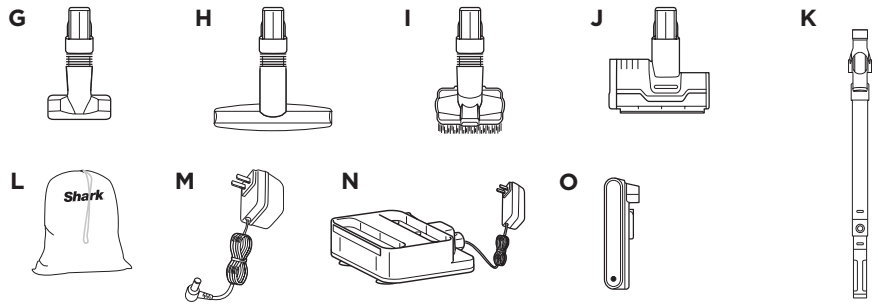

NOTE: Not all accessories come with all units. For a list of the accessories included with this model, see the top inside flap of the box. To order additional accessories, visit **sharkaccessories.com**.

FIVE (5) YEAR LIMITED WARRANTY

The Five (5) Year Limited Warranty applies to purchases made from authorized retailers of **SharkNinja Operating LLC.** Warranty coverage applies to the original owner and to the original product only and is not transferable.

SharkNinja warrants that the unit shall be free from defects in material and workmanship for a period of five (5) years from the date of purchase when it is used under normal household conditions and maintained according to the requirements outlined in the Owner's Guide, subject to the following conditions and exclusions:

What is covered by this warranty?

1. The original unit and/or non-wearable components deemed defective, in SharkNinja's sole discretion, will be repaired or replaced up to five (5) years from the original purchase date.
2. In the event a replacement unit is issued, the warranty coverage ends six (6) months following the receipt date of the replacement unit or the remainder of the existing warranty, whichever is later. SharkNinja reserves the right to replace the unit with one of equal or greater value.

What is not covered by this warranty?

1. Normal wear and tear of wearable parts (such as foam filters, HEPA filters, pads, etc.), which require regular maintenance and/or replacement to ensure the proper functioning of your unit, are not covered by this warranty. Replacement parts are available for purchase at **sharkaccessories.com**.
2. Any unit that has been tampered with or used for commercial purposes.
3. Damage caused by misuse (e.g., vacuuming up water or other liquids), abuse, negligent handling, failure to perform required maintenance (e.g., not cleaning the filters or not removing debris from the brushroll) or damage due to mishandling in transit.
4. Consequential and incidental damages.
5. Defects caused by repair persons not authorized by SharkNinja. These defects include damages caused in the process of shipping, altering, or repairing the SharkNinja product (or any of its parts) when the repair is performed by a repair person not authorized by SharkNinja.
6. Products purchased, used, or operated outside North America.

How to get service

If your appliance fails to operate properly while in use under normal household conditions within the warranty period, visit **sharkclean.com/support** for product care and maintenance self-help. Our Customer Service Specialists are also available at **1-800-798-7398** to assist with product support and warranty service options, including the possibility of upgrading to our VIP warranty service options for select product categories. We also ask that you register your product online at **registeryourshark.com** and have the product on hand when you call, so we may better assist you.

SharkNinja will cover the cost for the customer to send in the unit to us for repair or replacement. A fee of $25.95 (subject to change) will be charged when SharkNinja ships the repaired or replacement unit.

How to initiate a warranty claim

You must call **1-800-798-7398** to initiate a warranty claim. In order to better assist you please register your product prior to calling and have your product with you at the time of your call. You will need the receipt as proof of purchase. A Customer Service Specialist will provide you with return and packing instruction information. We also ask that you register your product online at **registeryourshark.com** and have the product on hand when you call, so we may better assist you.

How state law applies

This warranty gives you specific legal rights, and you also may have other rights that vary from state to state. Some states do not permit the exclusion or limitation of incidental or consequential damages, so the above may not apply to you.

TWO (2) YEAR LIMITED BATTERY WARRANTY

The Two (2) Year VIP Limited Warranty applies to purchases made from authorized retailers of **SharkNinja Operating LLC**. Warranty coverage applies to the original owner and to the original product only and is not transferable.

SharkNinja warrants that the battery shall be free from defects in material and workmanship for a period of two (2) years from the date of purchase when it is used under normal household conditions and maintained according to the requirements outlined in the Owner's Guide, subject to the following conditions and exclusions:

What is covered by this warranty?

1. The original battery deemed defective, in SharkNinja's sole discretion, will be replaced up to two (2) years from the original purchase date.

2. In the event a replacement battery is issued, the warranty coverage ends six (6) months following the receipt date of the replacement battery or the remainder of the existing warranty, whichever is later. SharkNinja reserves the right to replace the unit with one of equal or greater value.

What is not covered by this warranty?

1. Normal wear and tear of the battery, which requires optimal temperature storage and operation to ensure its proper functioning. Replacement batteries are available for purchase at **sharkaccessories.com**
2. A battery that has been tampered with or used for commercial purposes.
3. Damage caused by misuse (e.g., exposing battery to liquids or extreme hot and/or cold temperatures), abuse, negligent handling, failure to perform required maintenance, or damage due to mishandling in transit.
4. Consequential and incidental damages.
5. Defects caused by repair persons not authorized by SharkNinja. These defects include damages caused in the process of shipping, altering, or repairing the SharkNinja product (or any of its parts) when the repair is performed by a repair person not authorized by SharkNinja.
6. Products purchased, used, or operated outside North America.

How to get service

If your battery fails to operate properly while in use under normal household conditions within the warranty period, visit **sharkclean.com/support** for product care and maintenance self-help. Our Customer Service Specialists are also available at **1-800-798-7398** to assist with product support and warranty service options. So we may better assist you, please register your product online at **registeryourshark.com** and have the product on hand when you call.

SharkNinja will cover the cost for the customer to send in the unit to us for replacement. A fee of $20.95 (subject to change) will be charged when SharkNinja ships the replacement unit.

How to initiate a warranty claim

You must call **1-800-798-7398** to initiate a warranty claim. You will need the receipt as proof of purchase. We also ask that you register your product online at **registeryourshark.com** and have the product on hand when you call, so we may better assist you. A Customer Service Specialist will provide you with return and packing instruction information when you call.

How state law applies

This warranty gives you specific legal rights, and you also may have other rights that vary from state to state. Some states do not permit the exclusion or limitation of incidental or consequential damages, so the above may not apply to you.

REGISTER YOUR PURCHASE

registeryourshark.com

Scan QR code using mobile device

Scan here or visit qr.sharkclean.com/odortech for more information

RECORD THIS INFORMATION

Model Number: _____

Serial Number: _____

Date of Purchase: _____
(Keep receipt)

Store of Purchase: _____

TECHNICAL SPECIFICATIONS

Voltage: 120V~, 60Hz

Watts: 309W

ODOR NEUTRALIZER SPECIFICATIONS

1. Product Name: Odor Neutralizer Cartridge
2. Manufacturer: Shark Ninja 89 A Street Needham, MA 02494
3. Weight: 17.4g / 0.61oz
4. Ingredients: Solid SM composite polymer C17 + fragrance SE 272235

PLEASE READ CAREFULLY AND KEEP FOR FUTURE REFERENCE.
This Owner's Guide is designed to help you keep your vacuum running at peak performance.

BATTERY REMOVAL AND DISPOSAL
This product uses a lithium-ion rechargeable and recyclable battery. When the battery no longer holds a charge, it should be removed from the vacuum and recycled. DO NOT incinerate or compost the battery.

When your lithium-ion battery needs to be replaced, dispose of it or recycle it in accordance with local ordinances or regulations. In some areas, it is illegal to place spent lithium-ion batteries in the trash or in a municipal solid waste stream. Return spent battery to an authorized recycling center or to retailer for recycling. Contact your local recycling center for information on where to drop off the spent battery.

Note: This unit has been tested and found to comply with FCC limits for Class B digital devices. These limits are designed to provide reasonable protection against harmful interference in a residential installation. This unit generates, uses, and can radiate radio frequency energy, and if not installed and used in accordance with the instructions, may cause harmful interference to radio communications.

Operation of this unit may not cause harmful interference, and this unit must accept any interference received, including interference that may cause undesired operation.

To see if this unit interferes with radio or television reception, try turning it off and on.

To correct any interference:

- Reorient or relocate the receiving antenna.
- Increase the distance between the unit and the receiver.
- Connect the unit to a different outlet than the receiver.
- Consult the dealer or an experienced technician for help.

Caution: Any changes or modifications to this unit not expressly approved by the party responsible for compliance could void the user's authority to operate it.

NOTES

NOTES

sharkclean.com

PLEASE READ CAREFULLY AND KEEP FOR FUTURE REFERENCE.

This Owner's Guide is designed to help you get a complete understanding of your new Shark STRATOS™ CLEAN SENSE IQ Cordless MultiFLEX® Vacuum with DuoClean® PowerFins™ HairPro™and Odor Neutralizer Technology

SharkNinja Operating LLC
US: Needham, MA 02494
CAN: Ville St-Laurent, QC H4S 1A7

1-800-798-7398
sharkclean.com

Illustrations may differ from actual product. We are constantly striving to improve our products; therefore the specifications contained herein are subject to change without notice.

This product may be covered by one or more U.S. patents. See sharkninja.com/patents for more information.

© 2022 SharkNinja Operating LLC. DUOCLEAN, MULTIFLEX, and SHARK are registered trademarks of SharkNinja Operating LLC. HAIRPRO, POWERFINS, and SHARK STRATOS are trademarks of SharkNinja Operating LLC.

IZ800Series_IB_MP_220712

@sharkcleaning