CAUTION: Maintenance

1. Replacement parts may be available at the store where you purchased your faucet.
2. Always turn off water and relieve pressure before working on your faucet.

NOTES: Cleaning Instructions

1. To keep the faucet clean, you should clean the faucet frequently and regularly.
2. Clean the faucet with clear water or mild liquid, rinse the faucet with clear water and then dry the faucet with soft cotton cloths.
3. Do not use any abrasive cleansers, cloths, or paper towel.
4. Do not use any acid or abrasive detergent.

TROUBLE-SHOOTING

If you've followed the instruction carefully and your faucet still does not work properly, take these corrective steps.

Problem	Cause	Action
Leaks underneath handle.	Cartridge has come loose.	Tighten the cartridge.
Water will not shut off completely.	Dirty or worn out washer in cartridge.	Remove handle and cartridge to check if the washer is damaged permanently or dirty. Re-install cartridge.

Model: 97718

Drinking Water Faucet

PACKING LIST

After you open this package, please check to ensure that all of the following items are included.

A-Faucet B-Mounting Assemblies C-Plastic Washer+Nut D-Allen Wrench

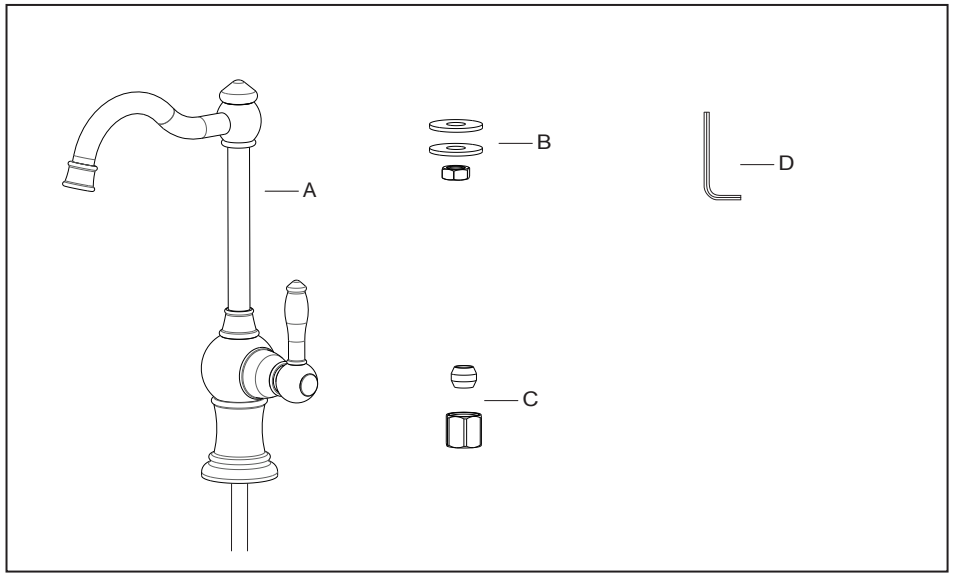

IMPORTANT NOTICES: For easy installation, please read all the instruction completely before beginning.
Before installing this product, make sure that water line trash is cleared to avoid blockage.

YOU MAY NEED

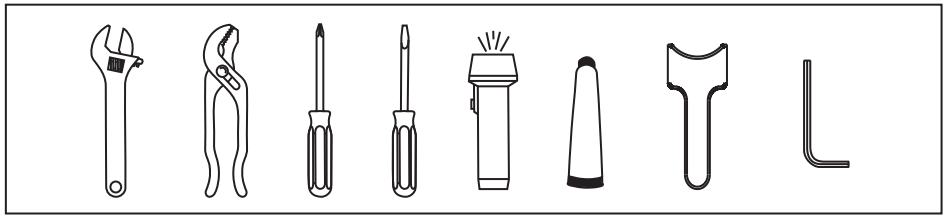

Questions, problems, missing parts?
call Akicon Customer Service 8 a.m.-6p.m. EST, Monday-Friday
Phone: +1(302)213 4406, Email: service@akiconshop.com
AKICONSHOP.COM

EX: E002006T Rev: A

INSTALLATION PROCEDURES

1

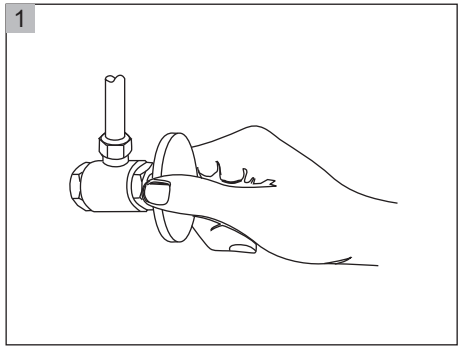

You should clean all the dirts from valve outlets. Turning off the water supply valves. This is usually found near the water meter. If you are replacing an existing faucet, remove the faucet from the sink and clean the sink surface thoroughly.

2

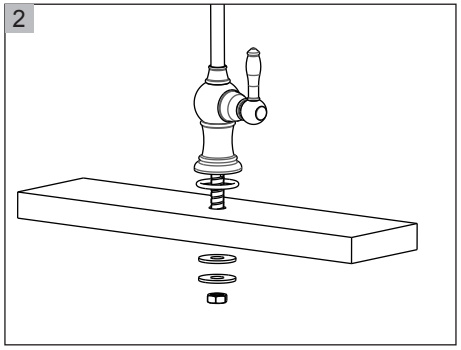

Install without Deck Plate. Make sure the O-RING is placed onto the bottom of Base Ring. Install faucet through hole in sink. From underside sink, put Plastic Washer and Mounting Nut. Position faucet on sink properly and tighten Mounting Nut.

3

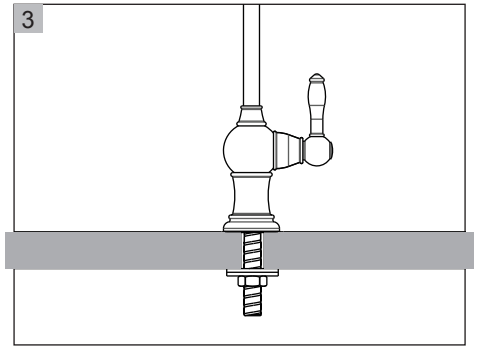

If necessary, tighten screws using a adjustable wrench until the faucet is firmly connected to the sink.

4

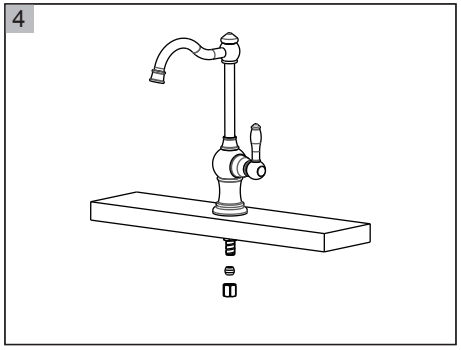

5

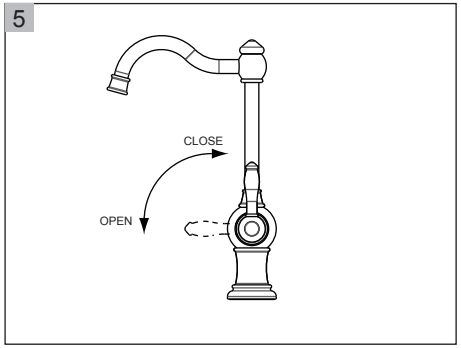

If necessary, tighten screws using a adjustable

6

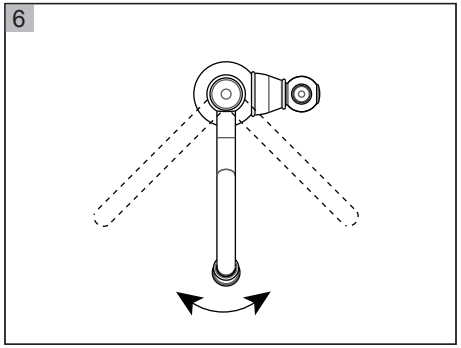

Handle Removal Maintenance

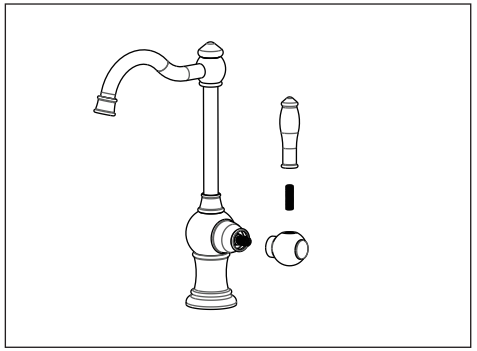

Turn off water and relieve pressure! Detach handle button using a small flathead screwdriver, unscrew set screw using Allen Wrench and take off handle.

Valve Cartridge Removal Maintenance

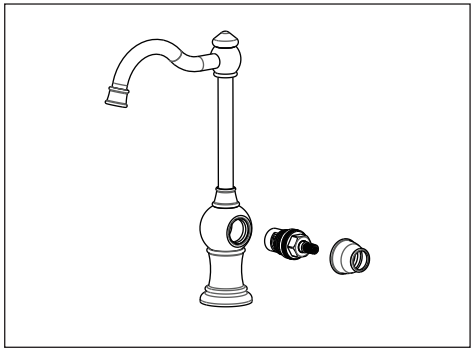

Remove handles. Unscrew Dome Cap counter clockwise by hand. Unscrew Retaining Nut using adjustable wrench, take out cartridge assembly and inspect. Replace parts as necessary. Reassemble parts by reversing steps.