WATER CREATION

MODEL: MADISON72

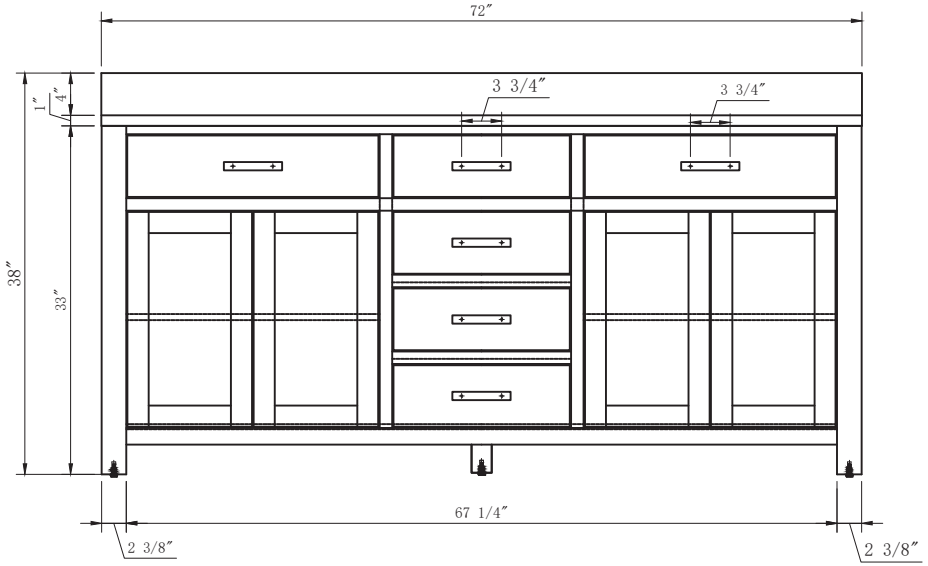

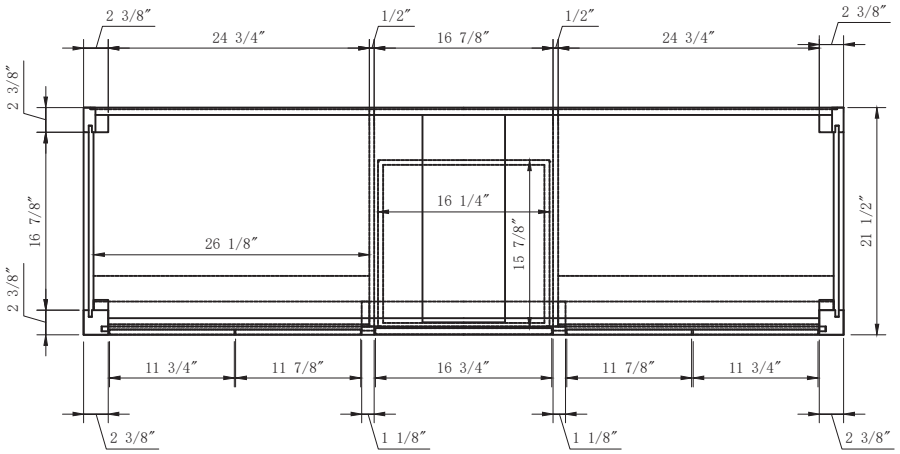

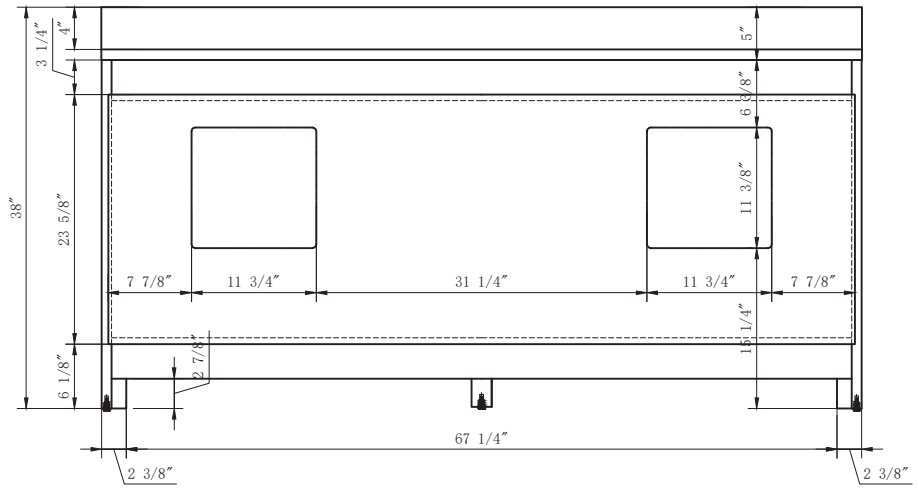

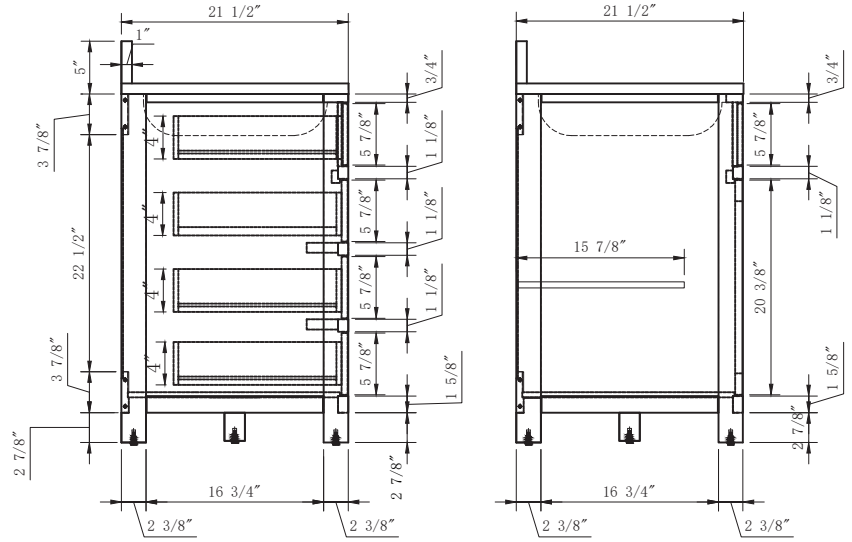

WATER CREATION

MODEL: MADISON72

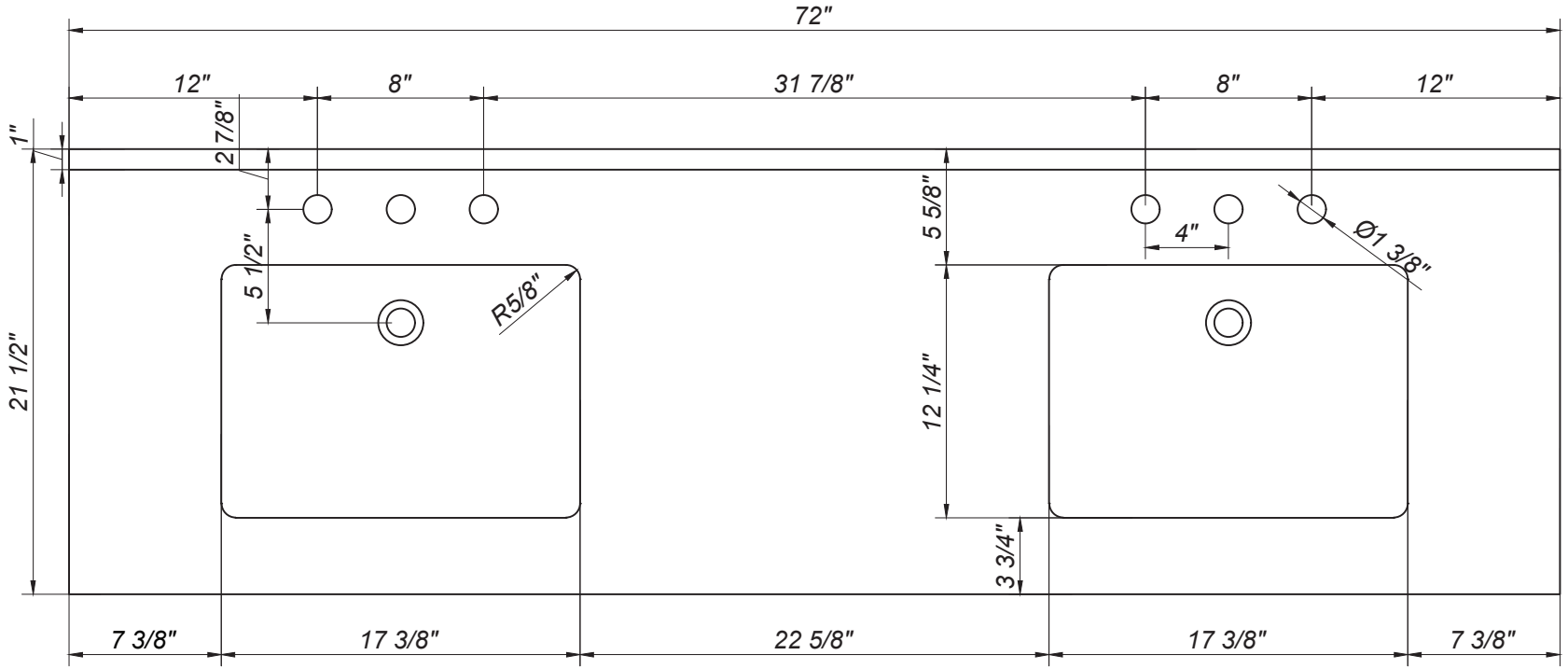

WATER CREATION

MODEL: MADISON72

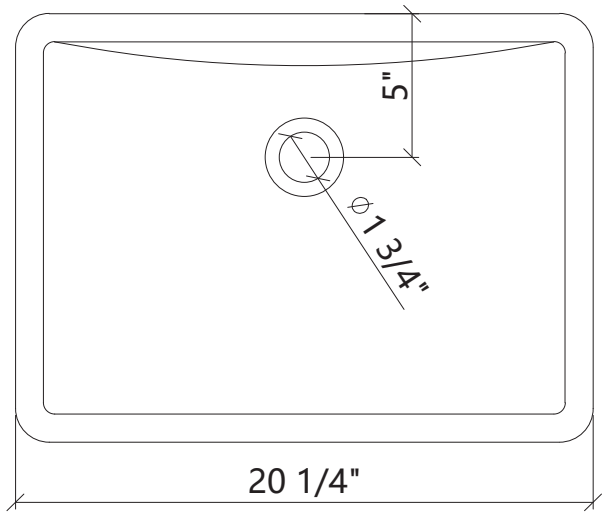

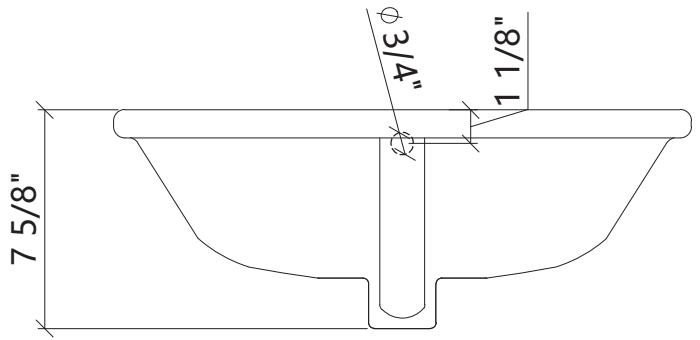

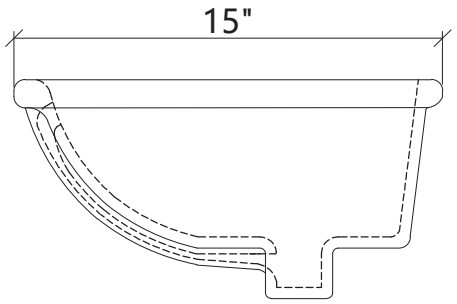

WATER CREATION

MODEL: RET-M-7236

