TURBO TUBE

INLINE MIXED FLOW FANS



Standard
Speed Switch
Get two fans
in One!

POWERFUL MIXED FLOW FANS

SOLUTION FOR RESIDENTIAL AND COMMERCIAL VENTILATION



Tel: 888-640-0925
Fax: 513-268-4597

Sales@vents-us.com
Vents-US.com
400 Murray Rd,
Cincinnati, OH 45217

HVI MEMBER™ ETL LISTED c US Intertek HARDI

TT SERIES INLINE MIXED FLOW FANS



TURBO TUBE series fans are ideal solutions for multi-purpose use in residential and commercial ventilation.
TURBO TUBE fans combine the features and benefits of both axial and centrifugal fans.
Used for both supply and exhaust applications that require powerful airflow.

TURBO TUBE fans were engineered to be compact without any loss in performance and are the perfect solution for installation into limited spaces.

ENERGY EFFICIENT TURBO TUBE FANS

BENEFITS

- QUIET OPERATION: **1.1 – 4.5 Sones**
- HIGH PERFORMANCE: **up to 1069 CFM**
- ENERGY EFFICIENT: **24 – 343 W**
- DUCT COMPATIBILITY: **Ø 4", 5", 6", 8", 10", 12 3/8"**
- DOUBLE-SPEED CAPACITOR MOTOR WITH THERMAL OVERLOAD PROTECTION
- BUILT-IN 2-SPEED SWITCH & POWER CORD INCLUDED
- LONG-LIFE BALL BEARING (up to 40 000 hours)
- ROTARY AND REMOVABLE CENTRAL BODY FOR EASY INSTALLATION & MAINTENANCE
- COMPACT SIZE FOR LIMITED SPACES
- LIGHTWEIGHT, DURABLE AND UV RESISTANT PLASTIC CASE (FLAME RATING – 5VA)
- VIBRATION FREE OPERATION
- CORROSION FREE

INNOVATIVE DESIGN

AERODYNAMIC CASE

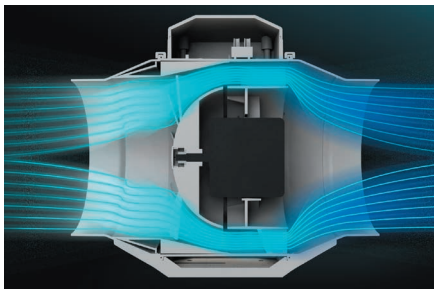

The motor and improved case shape provide high aerodynamic characteristics.

NEWLY DESIGNED IMPELLER



A specifically designed impeller provides smooth movement and powerful airflow.

EASY TO INSTALL & CLEAN



The Removable Body, including motor, impeller and junction box, is the Ultimate Solution for Easy Installation & cleaning.

EASY CONNECTION



The **Removable Body** with the junction box can be **rotated 180º** to **Facilitate Mounting and Wiring**.

BUILT-IN SPEED CONTROL



The **Double-speed Motor** is controlled with a **Built-in Speed Switch**.

INTEGRATED MOUNTING BRACKET



The fan case is **Equipped with a Mounting Plate** to attach the fan to the wall or ceiling.

EASY INSTALLATION



Fix the fan mounting plate on the flat surface.



Install the removable body inside the fan case.



Lock the removable body by clamps with latches.



Secure latches by screws.



Attach the ducts with clamps.



Insert the plug into electrical socket - the fan is READY to GO!



Select a required speed by the built-in speed switch. ENJOY the FRESH AIR.



Forget about dismantling or disassembling! Just remove the central body from the case and complete the servicing!

HVI MEMBER™

Intertek

HARDI

Turbo Tube product sheet

DIMENSIONS

Model	Measurements [in.]					lbs
	ØD	ØD1	B	H	L	
TT 150	5 3/4"	7 11/16"	8 3/4"	9 13/16"	11 5/8"	7

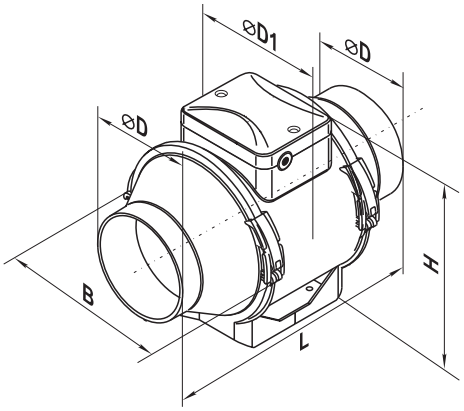

PERFORMANCE

Model	Duct dia	Speed	Sones	RPM*	Watts*	Amps*	CFM vs. Static Pressure (Ps) in WG										Max Ps. in WG	Volts
							0	0.1	0.2	0.3	0.4	0.5	0.6	0.7	0.8	0.9	1	
TT 150	6"	high	3.5	2072	55	0.46	244	230	210**	174	89**	72	59**	45	34	19	4	1	120 V / 60 Hz
		low	1.5	1896	28	0.23	161	135	70**	48	34**	19	0	-	-	-	-	0.6	

* The parameters RPM, Watts, Amps are indicated at 0.2 in WG static pressure.

SPECIFICATIONS

Voltage: 120 V, 60 Hz
Motor: Single-phase asynchronous motor
Duct compatibility: Ø4", 5", 6", 8", 10", 12 3/8"
Airflow capacity: up to 1069 CFM
Sones: 1.1 – 4.5
Power consumption: 24 – 343 W
Suitable for working airstreams up to 140 °F
IPX4 protection
Thermal overload protection
Power cord included
Built in low/high speed switch

Sales@vents-us.com
Vents-US.com
400 Murray Rd,
Cincinnati, OH 45217