makita®

PARTS BREAKDOWN

EA5600FR

rev 1_12-18-17

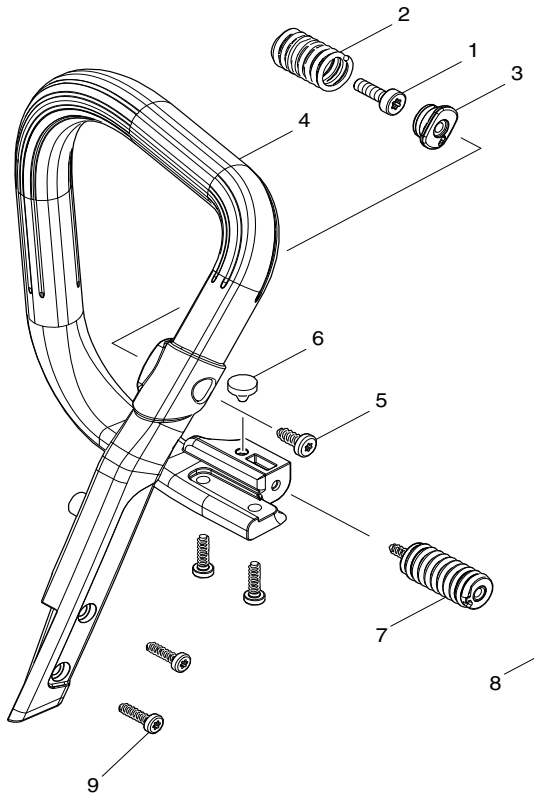
2
1
3
4
6
5
7
8
9

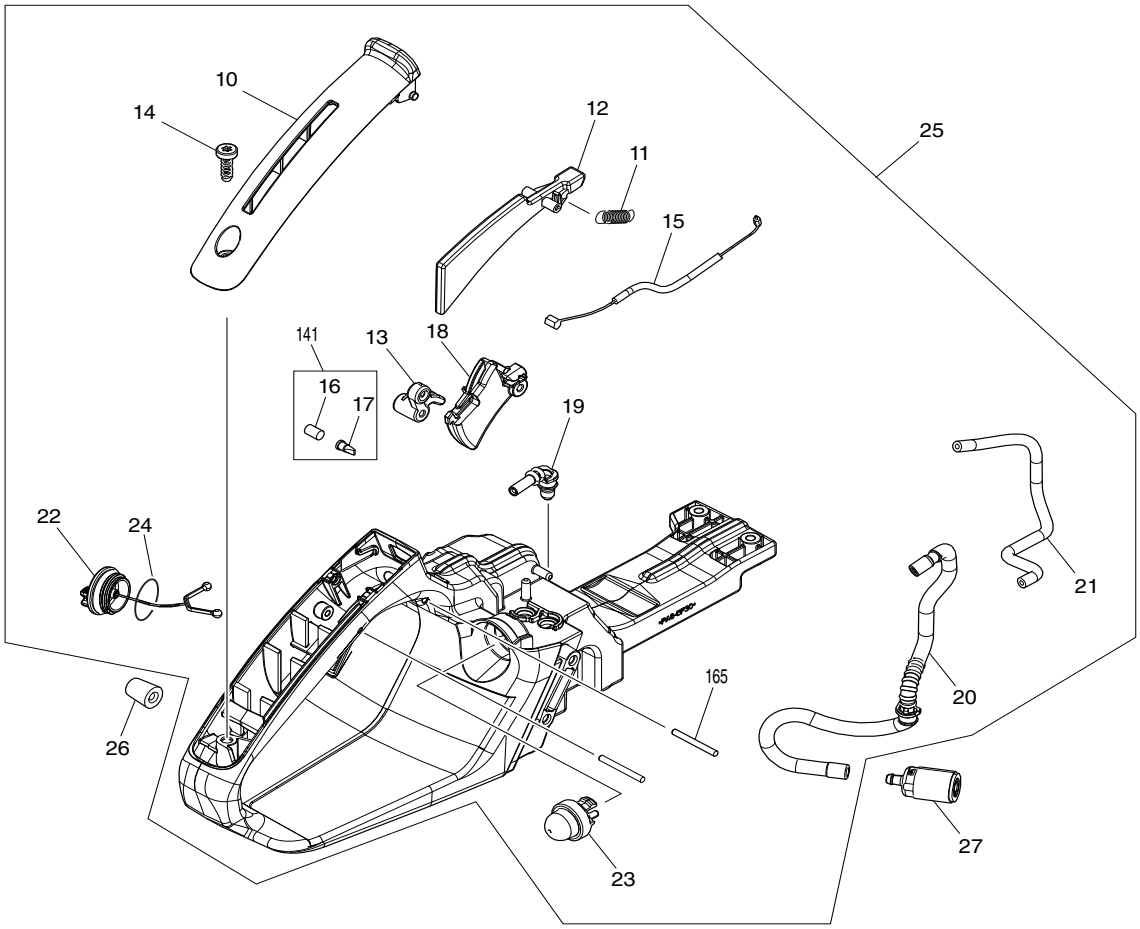
10
14
12
11
25
15
141
13
18
16
17
19
22
24
21
20
165
26
27
23

Products with multiple versions are listed in subsiding order with the newest version on top not indented.

Section	Fig. No.	Part No.	Description	EA5600FR	Tech Bulletin	Notes
1	1	266605-8	H.L. SOCKET HEAD BOLT M5X16	1		
1	2	231898-6	DAMPING SPRING	1		
1	3	456373-3	SPRING HOLDER	1		
1	4	456379-1	TUBULAR HANDLE	1		
1	5	913-467-164	H.L. TAPPING SCREW 6,7X16	1		
1	6	965-402-360	BUFFER	1		
1	7	143754-7	DAMPING SPRING ASSEMBLY	1		
1	8	908-006-205	SCREW M6X20 HEX-ROUND SOCKETR	1		
1	9	913-455-204	H.L. TAPPING SCREW 5.5X20	4		
1	10	131-117-050	GRIP OUTER SHELL	1		
1	11	130-117-060	TENSION SPRING5	1		
1	12	038-117-020	CATCH LEVER	1		
1	13	038-117-030	LOCKER	1		
1	14	266478-9	H.L. TAPPING SCREW 5.5X16	1		
1	15	131-117-040	BOWDEN CABLE	1		
1	16	010-175-030	SINTER INSERT	1		
1	17	010-175-021	VALVE	1		
1	18	130-117-010	THROTTLE LEVER	1		
1	19	131-114-340	FUEL PIPE	1		
1	20	131-114-310	FUEL PIPE	1		
1	21	131-114-090	TUBE 2.5-169	1		
1	22	168507-3	TANK CAP COMPLETE	1		INC 24
1	23	130-153-500	PRIMER PUMP	1		
1	24	213080-9	O-RING 29,3X3,6	1		
1	25	131-114-180	FUEL TANK SET(Red)	1		INC.10-24,141,165
1	26	181-111-230	IMPACT PROTECTER	1		
1	27	010-114-200	SUCTION HEAD	1		
1	141	195762-4	AIR VALVE SET	1		INC.16,17
1	165	935-930-280	PIN 3	2		

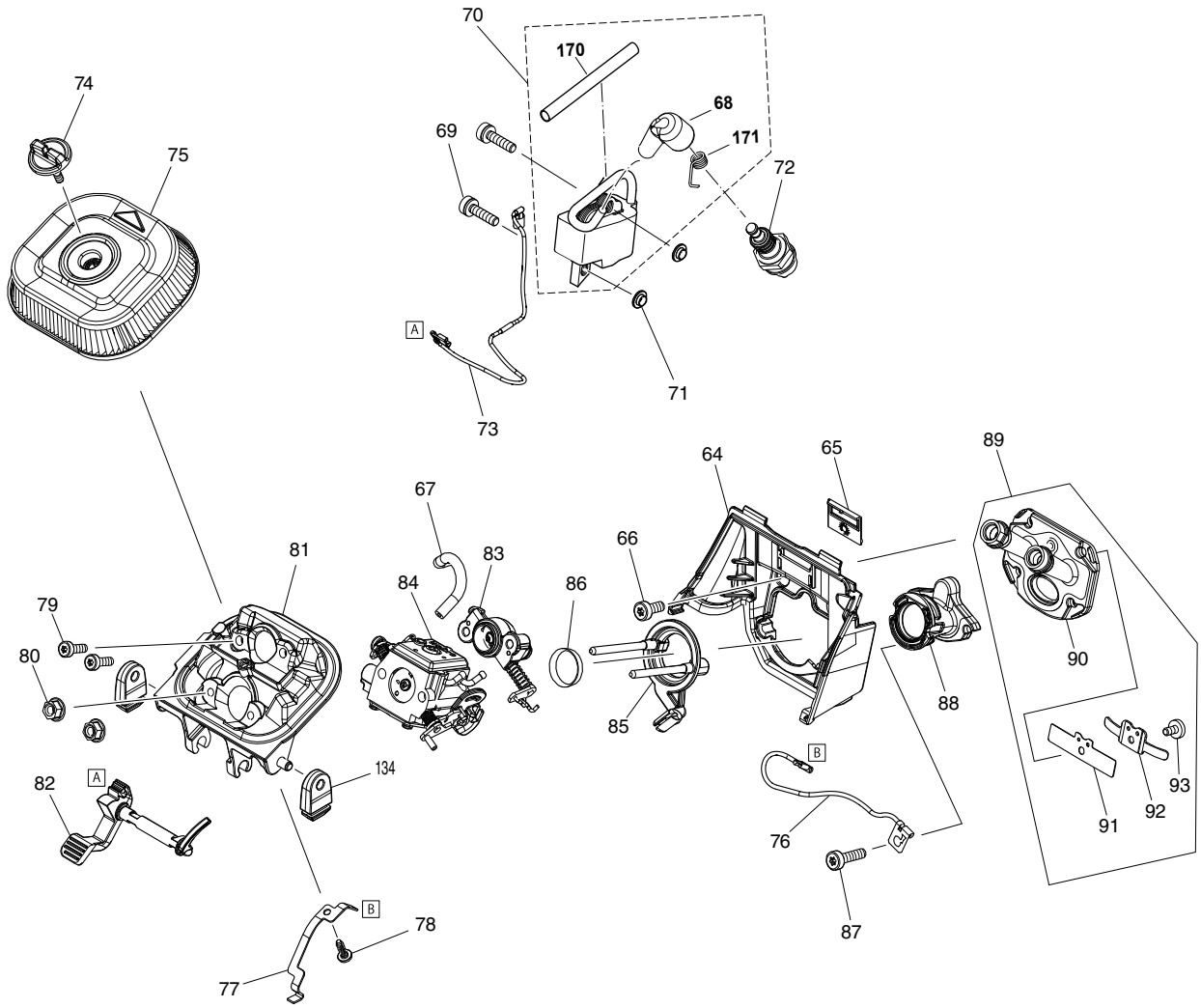
70
170
74
68
69
171
75
72
A
71
73
64
65
89
67
66
81
83
84
86
79
80
90
88
85
134
B
82
A
93
91
92
76
B
78
87
77

Products with multiple versions are listed in subsiding order with the newest version on top not indented.

Section	Fig. No.	Part No.	Description	EA5600FR	Tech Bulletin	Notes
2	28	185-213-100	LINK PLATE COMPLETE	1		
2	29	961011-9	STOP RING E-4	1		
2	29	257934-0	STOP RING E-4	1		
2	29	927-304-000	SAFETY WASHER	1		
2	31	181-213-250	HELICAL GEAR 18	1		
2	32	227743-1	HELICAL GEAR 11	1		
2	32	181-213-230	TESIONING SCREW	1		
2	33	130-213-250	TENSION SLIDER	1		
2	33	130-213-240	TENSION SLIDER	1		
2	34	452667-4	GEAR COVER PROFESSIONAL	1		
2	35	346029-5	BRAKE BAND	1		
2	36	130-250-011	SPIKE BAR	1		
2	37	266478-9	H.L. TAPPING SCREW 5.5X16	2		
2	38	920-405-000	HEX NUT M5	2		
2	39	326648-3	SPIKE BAR	1		
2	40	266850-5	H.L. SOCKET HEAD BOLT M5X10	2		
2	41	181-213-023	TENSION SPRING	1		
2	43	266421-8	TAPPING SCREW 3X10	1		
2	44	424178-9	OIL TUBE	1		
2	45	144274-4	TUBE COMPLETE	1		
2	46	161346-0	OIL PUMP COMPLETE	1		
2	47	908-705-125	H.L SOCKET HEAD BOLT M5X12	1		
2	48	450956-1	PUMP DRIVE	1		
2	49	001-182-042	FLAT WASHER 12	1		
2	50	181-180-300	CLUTCH ASSEMBLY	1		INC 168
2	51	181-223-200	CLUTCH DRUM CPL	1		
2	52	267820-7	CUP WASHER29	1		
2	53	259045-7	LOCK WASHER	1		
2	54	913-850-155	H.L. TAPPING SREW 5X15	3		
2	55	326647-5	CHAIN BREAK COVER	1		
2	56	913-455-204	TAPPING SCREW TORX 5.5X20	1		
2	57	456378-3	CHAIN CATCHER	1		
2	58	266421-8	TAPPING SCREW 3X10	2		
2	59	131-213-640	SPROCKET GUARD ASSEMBLY(Red)	1		INC.58, 60, 61

Products with multiple versions are listed in subsiding order with the newest version on top not indented.

Section	Fig. No.	Part No.	Description	EA5600FR	Tech Bulletin	Notes
2	60	456674-9	NUT COVER	1		
2	61	144689-5	FLANGE NUT COMPLETE	2		
2	108	131-213-050	HAND GUARD	1		
2	109	266478-9	H.L. TAPPING SCREW 5.5X16	1		
2	110	326676-8	BUSH 10	1		
2	135	313212-9	HAND GUARD GUIDE	1		
2	136	181-213-060	COMPRESSION SPRING 3	1		
2	137	456613-9	SPACER	1		
2	138	181-184-020	TENSION SPRING6	3		
2	139	181-111-230	IMPACT PROTECTER	1		
2	162	181-224-090	FLAT WASHER 10	1		
2	163	026-224-010	RIM SPROCKET 3/8”	1		
2	167	810449-4	CAUTION LABEL	1		

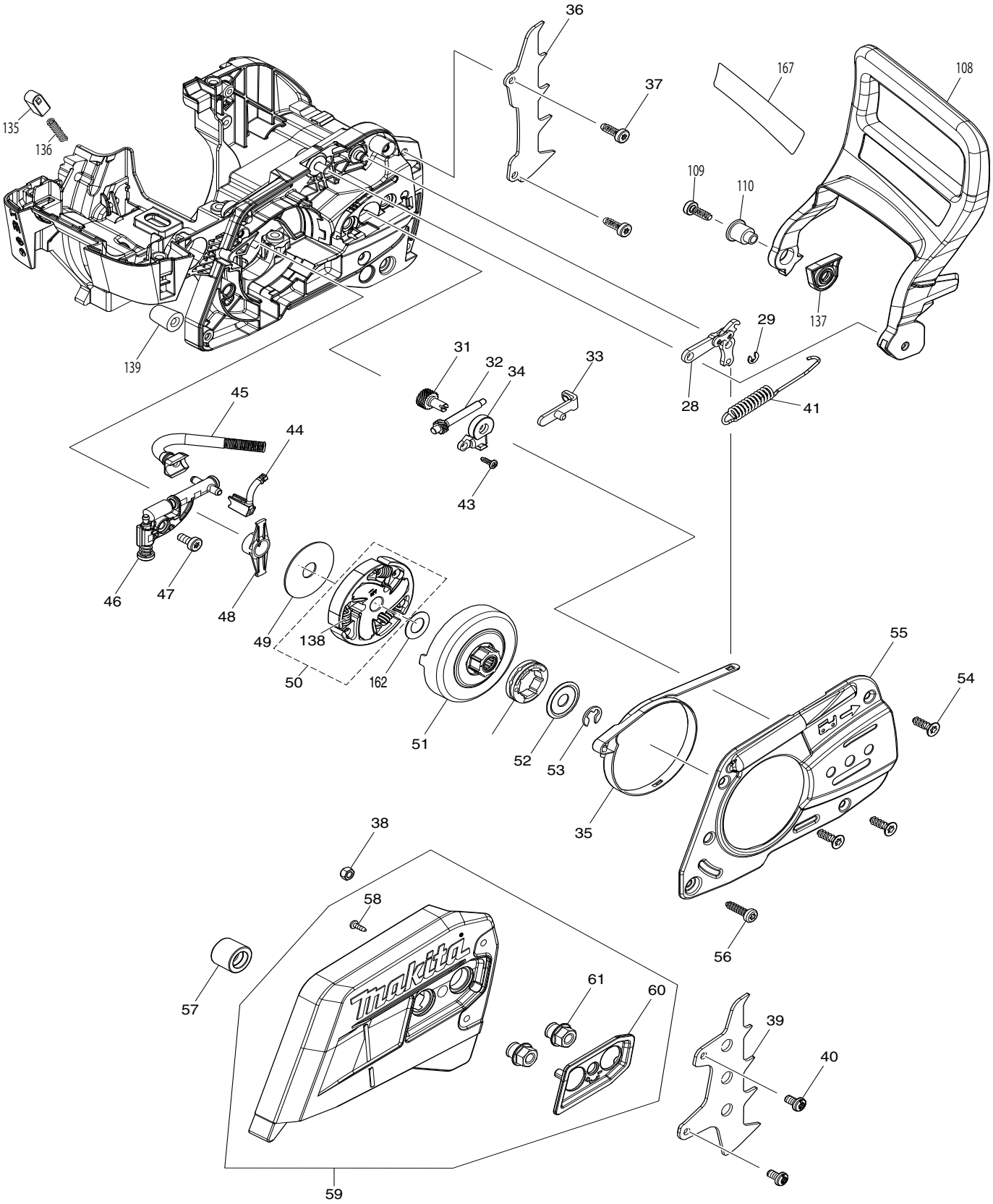
36
37
167
108
135
136
109
110
137
139
29
31
32
34
33
28
41
45
44
43
46
47
48
49
138
50
162
51
52
53
55
54
35
38
58
56
57
61
60
39
40
59

Products with multiple versions are listed in subsiding order with the newest version on top not indented.

Section	Fig. No.	Part No.	Description	EA5600FR	Tech Bulletin	Notes
3	64	131-131-080	INTERMEDIATE FLANGE	1		
3	65	195-118-141	SHUTTER PLATE	1		
3	66	908-005-125	H. L. SOCKET HEAD BOLT M5X12	2		
3	67	131-114-080	TUBE 2.5-64	1		
3	68	125-143-011	PLUG CAP	1		
3	69	908-805-205	SCREW M5X20 WITH SPRING WASHER	2		
3	70	131-140-100	IGNITION COIL COMPLETE	1		INC 68, 170, 171
3	71	195-143-031	ISOLATING WASHER	2		
3	72	965-603-021	SPARK PLUG	1		
3	73	632F91-5	LEAD UNIT	1		
3	74	265791-2	THUMP SCREW M4	1		
3	75	131-173-010	AIR FILTER	1		
3	76	632F92-3	LEAD UNIT	1		
3	77	131-155-010	CONTACT SPRING	1		
3	78	266421-8	TAPPING SCREW 3X10	1		
3	79	266476-3	TORX SOCKET HEAD BOLT M5X20	2		
3	80	175-131-300	HEXAGONAL NUT WITH COLLAR	2		
3	81	456376-7	INTAKE MANIFOLD	1		
3	82	456375-9	CHOKE LEVER	1		
3	83	131-151-700	AIR FLAP ASSEMBLY	1		
3	84	131-151-100	CARBURETOR	1		
3	85	131-131-070	FLANGE RING	1		
3	86	131-131-090	SLEEVE 19	1		
3	87	266476-3	TORX SOCKET HEAD BOLT M5X20	2		
3	88	131-131-050	SUCTION HOSE	1		INC. 90-93
3	89	131-131-160	AIR HOSE COMPLETE	1		
3	90	131-131-030	AIR HOSE	1		
3	91	131-179-020	REED VALVE	1		
3	92	131-179-010	VALVE STOPPER	1		
3	93	908-004-085	H.L SOCKET HEAD BOLT M4X8	1		
3	134	424806-6	INTAKE MANIFOLD DAMPER	2		
3	170	131-143-040	INSULATING TUBE 6-90	1		
3	171	326210-4	TERMINAL SPRING	1		

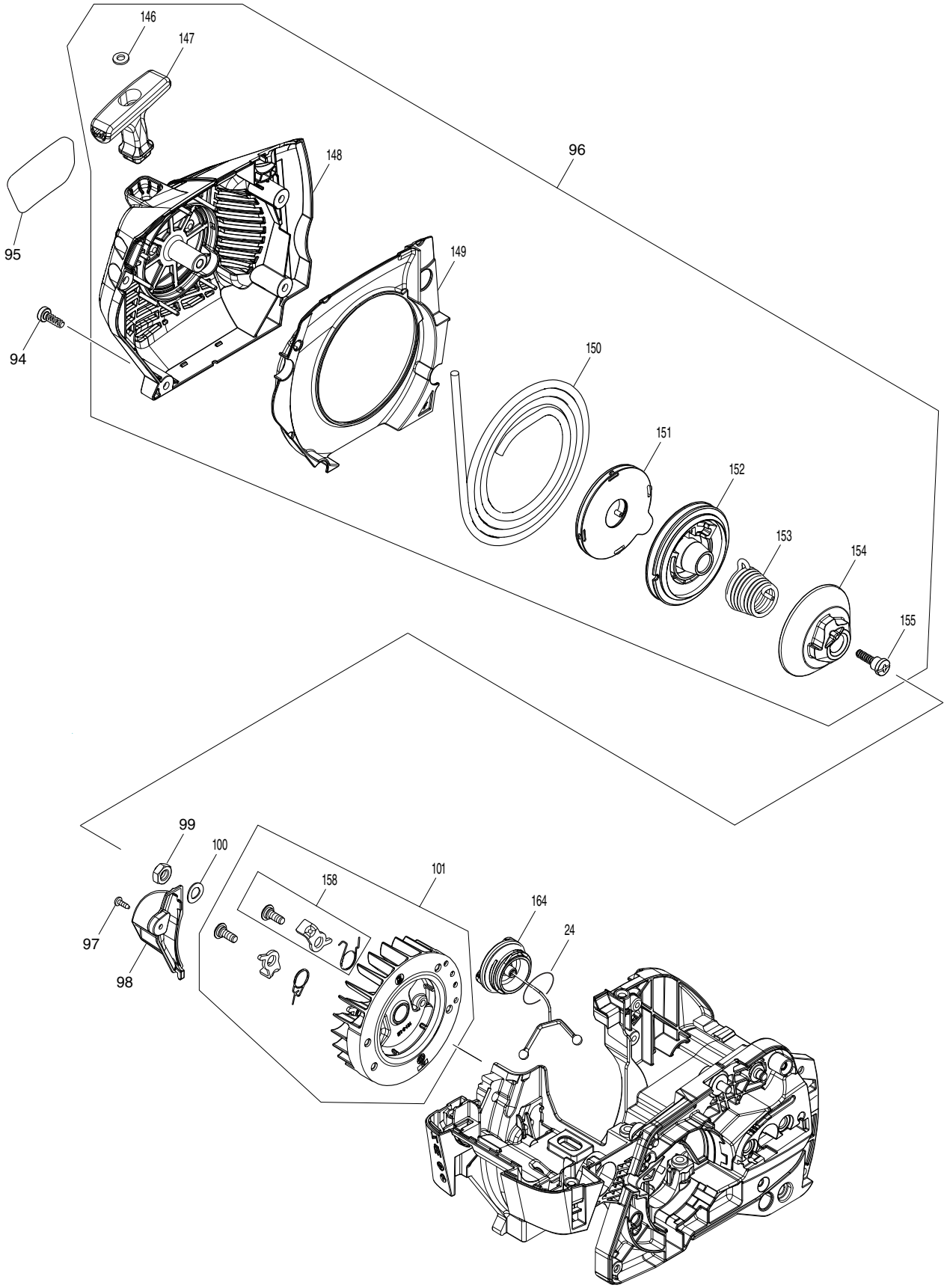
146
147
148
96
95
149
94
150
151
152
153
154
155
99
100
158
101
164
24
97
98

Products with multiple versions are listed in subsiding order with the newest version on top not indented.

Section	Fig. No.	Part No.	Description	EA5600FR	Tech Bulletin	Notes
4	24	213080-9	O-RING 29,3X3,6	1		
4	94	266478-9	H.L. TAPPING SCREW 5.5X16	4		
4	95	131-115-620	EA5600F MODEL NO LABEL	1		
4	96	131-160-100	RECOIL STARTER ASSEMBLY (Red)	1		INC. 146-155
4	97	266421-8	TAPPING SCREW 3X10	1		
4	98	456377-5	AIR DUCT	1		
4	99	920-308-024	HEX. NUT M8	1		
4	100	267822-3	SPRING WASHER 8	1		
4	101	143331-5	FLYWHEEL CPL.	1		INC.158
4	146	928-405-000	SPRING WASHER5	1		
4	147	181-164-010	STARTER GRIP	1		
4	148	131-160-160	STARTER HOUSING COMPLETE	1		
4	149	131-118-040	AIR GUIDE PLATE	1		
4	150	131-164-020	STARTER ROPE □D=3,5 L=103cm	1		
4	151	181-163-050	RETURN SPRING CPL.	1		
4	152	181-162-020	CABLE DRUM	1		
4	153	181-163-080	SPRING EASY START	1		
4	154	181-163-090	DRIVER FOR EASY START	1		
4	155	181-163-095	SCREW	1		
4	158	181-166-100	STARTER RACHET COMPLETE	2		
4	164	168507-3	TANK CAP COMPLETE	1		INC 24

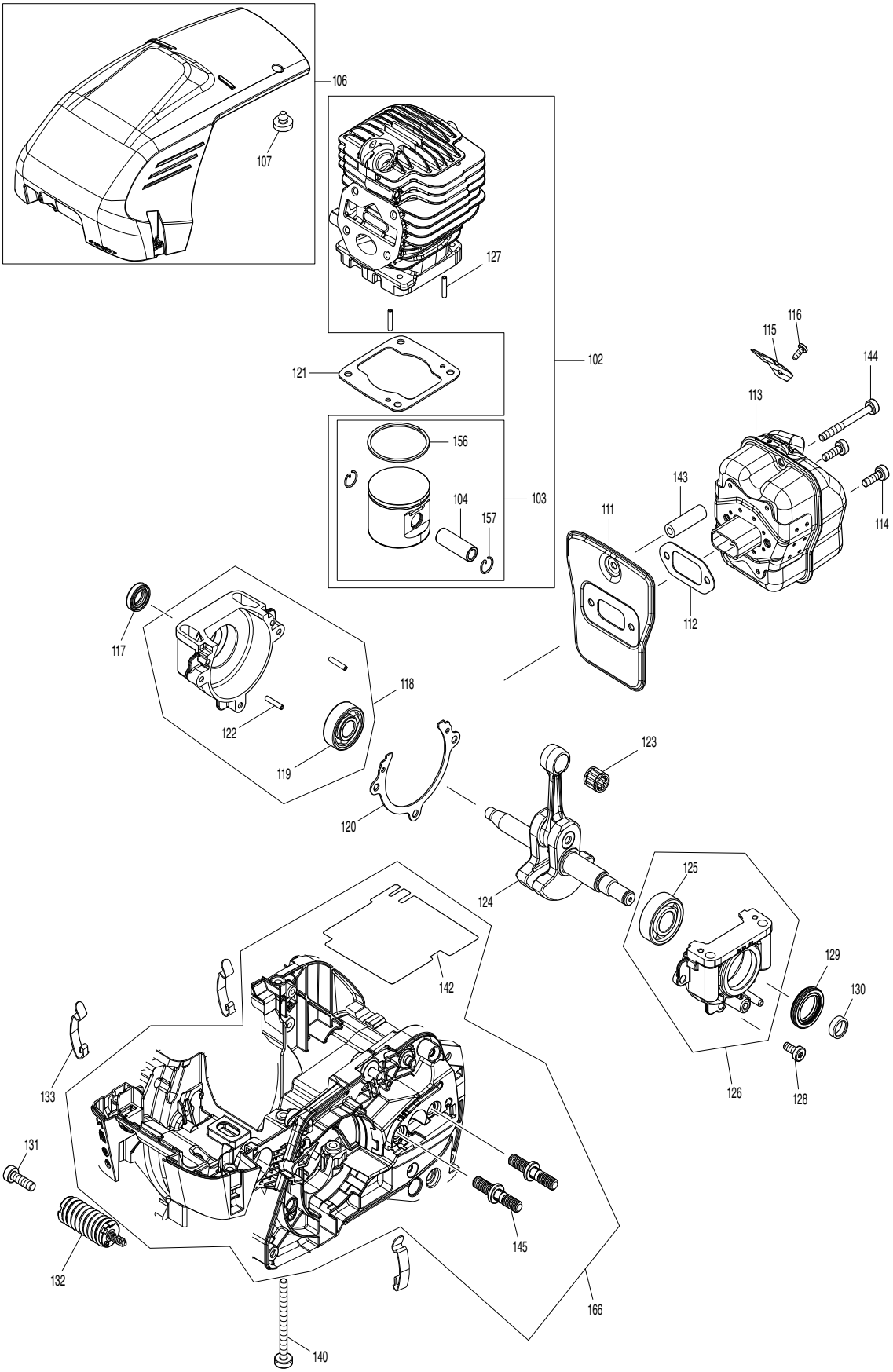
106
107
127
102
121
156
103
104
157
116
115
144
113
143
111
114
112
117
118
122
119
123
120
124
125
129
130
142
133
126
128
131
145
132
166
140

Products with multiple versions are listed in subsiding order with the newest version on top not indented.

Section	Fig. No.	Part No.	Description	EA5600FR	Tech Bulletin	Notes
5	102	131-131-200	CYLINDER PISTON SET	1		INC. 103,127
5	103	131-132-100	PISTON SET	1		INC. 104, 156, 157
5	104	131-132-030	PISTON PIN	1		
5	106	131-118-600	HOOD SET	1		INC.107
5	107	965-402-360	BUFFER	1		
5	111	131-174-090	COOLING PLATE	1		
5	112	395-174-120	MUFFLER GASKET	1		
5	113	131-174-100	MUFFLER COMPLETE	1		
5	114	266605-8	H.L.SOCKET HEAD BOLT M5X16	2		
5	115	131-174-040	SPARK ARRESTER	1		
5	116	914-535-105	SCREW□3.5X9.5	1		
5	117	962-900-156	OIL SEAL 12	1		
5	118	131-111-100	CRANKCASE MS COMPLETE	1		INC.119, 122
5	119	960-102-121	BALL BEARING	1		
5	120	131-111-060	CRANKCASE GASKET	1		
5	121	131-131-020	CYLINDER-BASE GASKET	1		
5	122	936-430-160	ROLL PIN 3-16	2		
5	123	962-210-111	NEEDLE CAGE	1		
5	124	131-120-100	CRANKSHAFT COMPLETE	1		
5	125	960-102-152	BALL BEARING 6202	1		
5	126	131-111-111	CRANKCASE CS COMPLETE	1		INC.125
5	127	936-430-160	ROLL PIN 3-16	2		
5	128	908-705-165	H.L. SOCKET HEAD BOLT M5X16	3		
5	129	962-900-160	OIL SEAL 20	1		
5	130	326658-0	SLEEVE 15	1		
5	131	908-006-205	TORX SOCKET HEAD BOLT M6X20	1		
5	132	143754-7	DAMPING SPRING ASSEMBLY	1		
5	133	130-118-070	CLAMP	3		
5	140	914-105-656	H.L. SOCKET HEAD BOLT M5X65	4		
5	142	131-111-080	HEAT□PROTECTION□FOIL	1		
5	143	327008-2	SLEEVE 5	2		
5	144	908-605-505	H.L. SOCKET HEAD BOLT M5X50	1		
5	145	905-708-215	BOLT	2		
5	156	181-132-080	PISTON RING D45	1		

Products with multiple versions are listed in subsiding order with the newest version on top not indented.

Section	Fig. No.	Part No.	Description	EA5600FR	Tech Bulletin	Notes
5	157	315-132-140	SPRING RING	2		
5	166	131-110-150	ENGINE HOUSING ASSEMBLY(Red)	1		INC. 142, 145

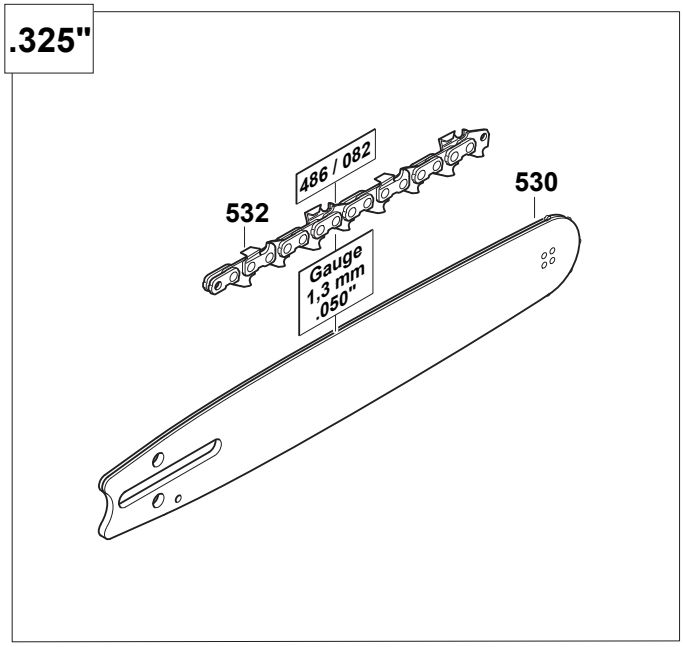
.325"
486 / 082
532
530
Gauge
1,3 mm
.050"

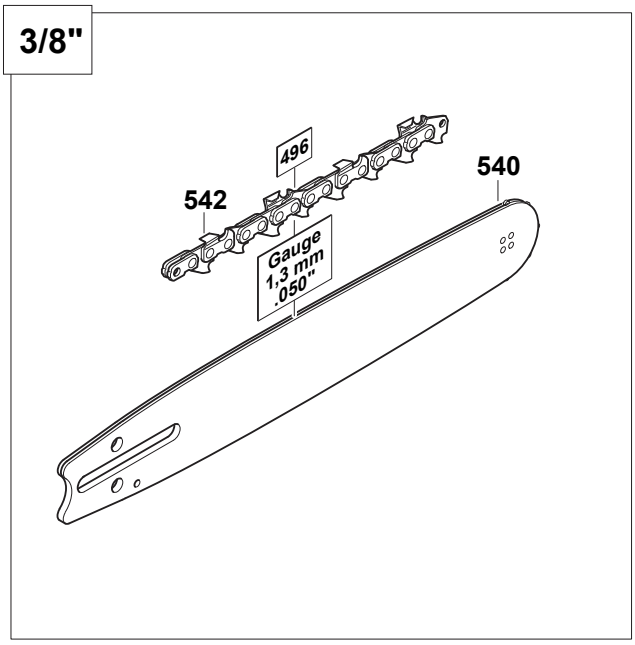
3/8"
496
542
540
Gauge
1,3 mm
.050"

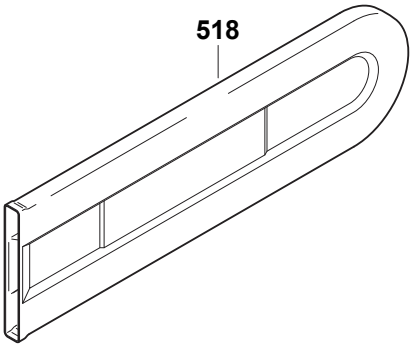
518

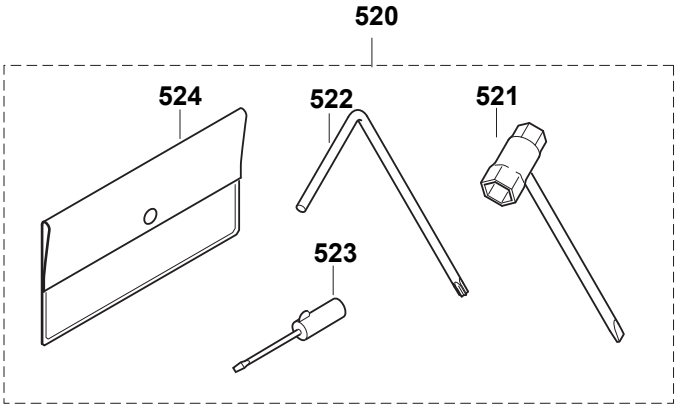
520
524
522
521
523

Products with multiple versions are listed in subsiding order with the newest version on top not indented.

Section	Fig. No.	Part No.	Description	EA5600FR	Tech Bulletin	Notes
6	518	952-020-650	20” BAR COVER	1		
6	520	957-004-002	TOOL KIT	1		
6	521	941-719-141	WRENCH	1		
6	522	782025-3	TORX WRENCH	1		
6	523	783012-5	SCREW DRIVER	1		
6	524	950-004-002	PLASTIC BAG	1		
6	530	415-045-641	18” GUIDE BAR .325 .050	1		
6	532	528-086-672	18” SAW CHAIN .325 .050	1		
6	540	443-053-661	20” GUIDE BAR 3/8 .050	1		
6	542	523-102-072A	20” SAW CHAIN 3/8 .050	1		