ExBrite USA

See Better with Smart Light

Installation and Operating Manual

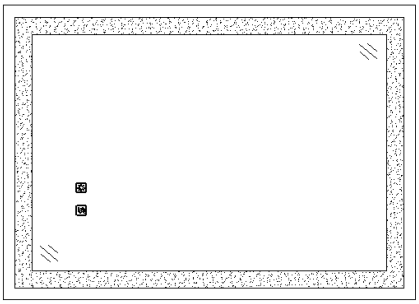

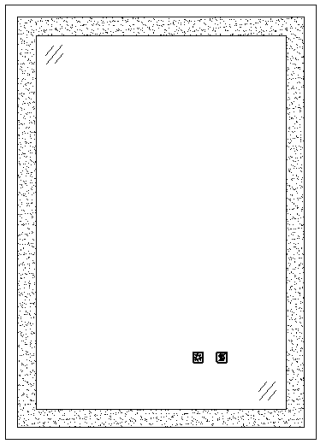

JQBM2028FBVC2V1
JQBM2436FBVC2V1
JQBM3036FBVC2V1

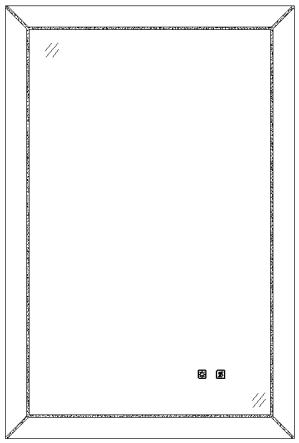

JQBM2436FB3D2V1
JQBM4032FB3D2V1
JQBM4836FB3D2V1

WARNING AND SAFETY INSTRUCTIONS

Before assembling your LED Lighted Mirror fixture, please make sure that you carefully read through this instruction sheet, refer back to them during installation to ensure your product is fitted safely and correctly.Keep these instructions for future use.

WARNING Risk of Fire and Electric Shock

- All fittings must be installed in accordance with current IEE wiring regulations. If in doubt, consult a qualified electrician.
- Switch off the electrical supply at the main circuit board before installation and maintenance.
- Suitable for indoor use only. This product should be positioned well away from curtains and fabrics. Never cover the mirror.
- Regularly check the cord, the transformer and all other parts for damage. If any part is damaged the product should not be used.

INSTALLATION SAFETY

- Inspect the product immediately upon receipt for the transit damage or missing parts.Handle the product with care and protect against knocks to all side and edge of the glass.
- Ensure there are no hidden pipes or cables in the wall before drilling.
- Wear suitable eye protection when drilling.Take care if drilling on tiled surfaces in case the drill slips.

⚠ CAUTION

The light source of this product is non-changeable light diodes(LED)Do not disassemble the product, as the light diodes can cause damage to the eyes.

NOTE: The important safeguards and instructions that appear in this manual are not meant to cover all possible conditions and situations that may occur. It must be understood that common sense, caution and care, are factors that can't be built into any product. These factors must be supplied by the person(s) caring for and operating the fixture. Do not install this fixture in hazardous locations.

CHECK PRODUCT LIST AFTER OPENING THE PACKAGE

- LED Lighted Mirror --1 pcs
- Screws forwall --2~3 pcs
- Type A Plastic Anchor --2~3 pcs
- Installation Manual --1 pcs

TOOLS YOU MAY NEED



INSTALIATION MANUAL

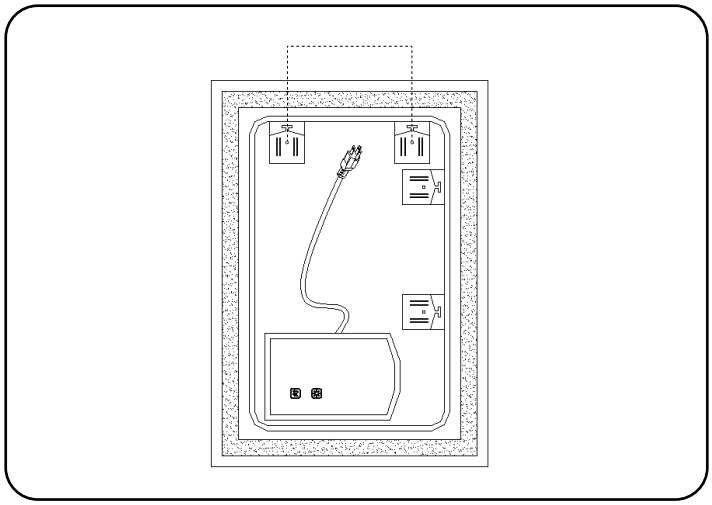

1 Measure the distance of the lamp body hanging hole

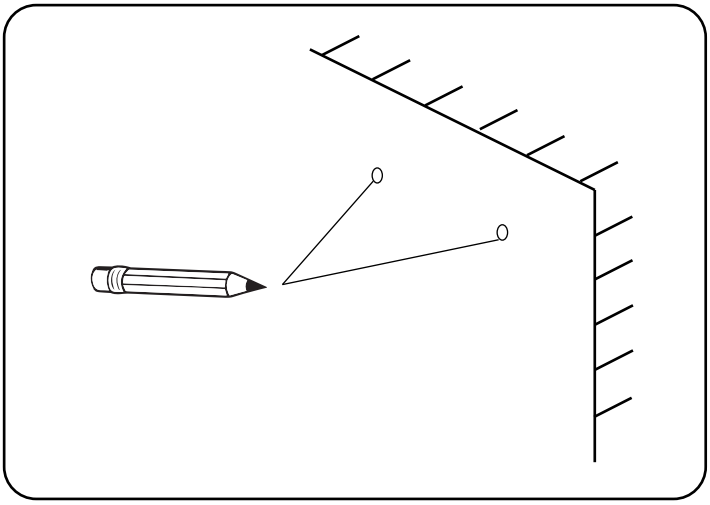

2 Mark the hole position on the wall

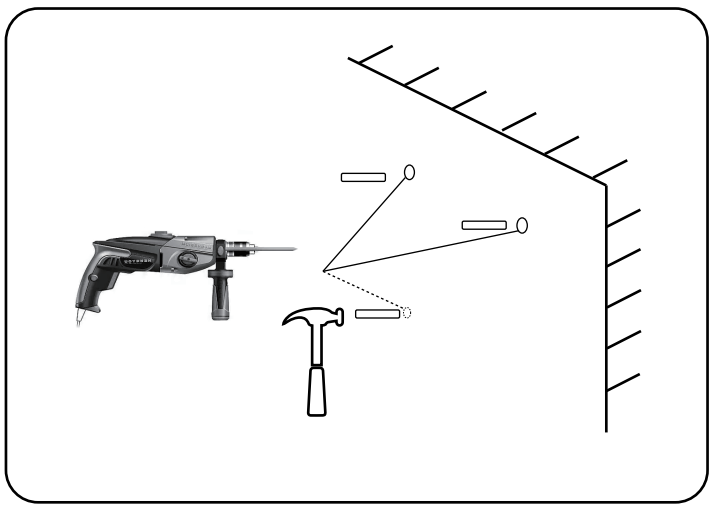

3 Drill the holes and place the suitable plastic anchors.

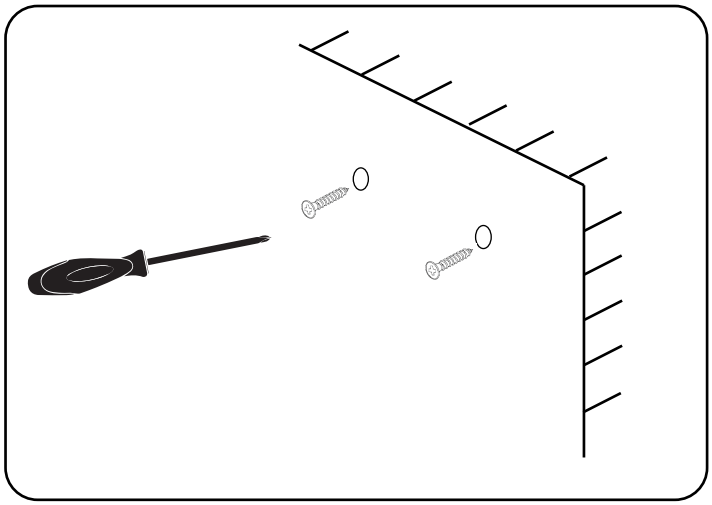

4

Arrange the screws on the wall, leaving about 3/8 inch outside the wall,and make sure the screws are stable

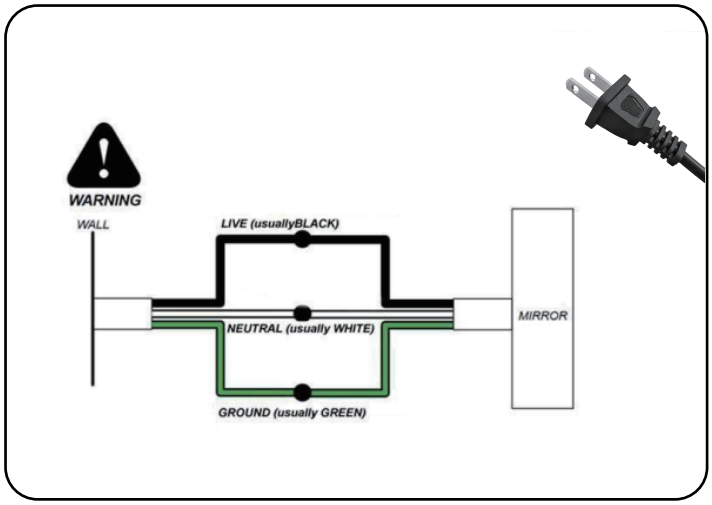

5

Connect the mirror with the main supply.

- We provide plug with mirror.
- Optional to cut the plug directly then connect to electrical wiring if using wall switch.

ATTENTION:
PLEASE CUT OFF THE MAIN POWER SUPPLY BEFORE WIRING!

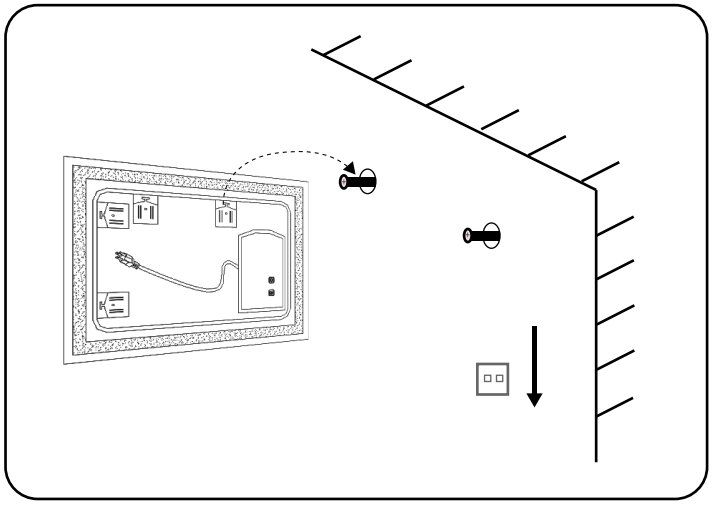

6

Hang the mirror on the screw

ExBrite USA

See Better with Smart Light

OPERATION INSTRUCTION



ON/OFF button



- Button turns blue when connected to main supply.
- Short-touch the button to turn on/off the mirror.
- Long touching the buiton to adjust the brightness (Dimming)
- Finish setting by withdrawing yourfinger when the color reaches the one you need.

Anti-Fog Function



Defoggerbutton

- Mirror begins to be warm and defog after pressing the defogger button. Press again to quit the anti-fog function.
- Long-touch the button to turn on/off the blue background light.
- Note: The defogger will stop automatically after 60 minutes of continuous operation to prevent any damage caused by prolonged high temperature.

AFTERCARE INSTRUCTIONS

Clean using a soft dry cloth only when turned off Never use cleaning agents orabrasive materials. Do not allow moisture to come into contact with lamp.

THANK YOU FOR YOUR SUPPORT.

We wish you have wonderful experience in our product. Ilf you have any other needs or queries, please feel free to contact us by email info@exbriteusa.com, and get replies within 48 business hours.