HUSKY®

Item #1014 978 122
Model #7901309012

USE AND CARE GUIDE

PORTABLE LED TRIPOD WORK LIGHT

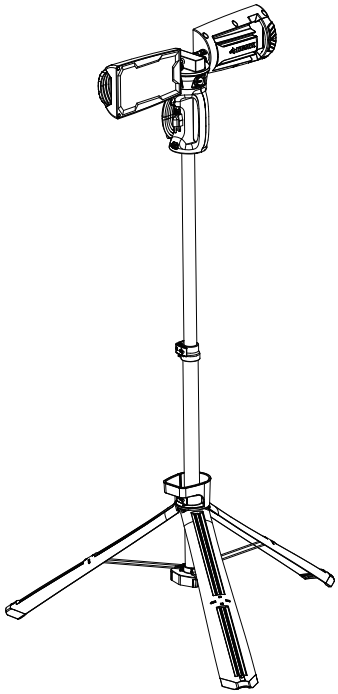

Questions, problems, missing parts?
Before returning to the store, call HUSKY Customer Service
8 a.m. - 7 p.m., EST, Monday - Friday, 9 a.m. - 6 p.m., EST, Saturday

1-888-434-8759 (1-888-HD-HUSKY)

HUSKYTOOLS.COM

THANK YOU

We appreciate the trust and confidence you have placed in Husky through the purchase of this portable led tripod work light. We strive to continually create quality products designed to enhance your home. Visit us online to see our full line of products available for your home improvement needs. Thank you for choosing HUSKY!

Table of Contents

Safety Information **2**
Warranty **2**
Pre-Installation **3**
Planning Installation 3
Package Contents 3
Installation **4**
Care and Maintenance **8**
Troubleshooting **8**

Safety Information

Please read and understand this entire manual before attempting to assemble, operate or install the product. Save these instructions for future reference.

WARNING: When using outdoor-use portable luminaires, basic safety precautions should always be followed to reduce the risk of fire, electric shock, and personal injury, including the following:
READ ALL INSTRUCTIONS
a) Use only three-wire outdoor extension cords that have three-prong grounding plugs and grounding receptacles that accept the appliance's plug.
b) Ground Fault Circuit Interrupter (GFCI) protection is to be provided on the circuit(s) or outlet(s) to be used for the wet location portable luminaire. Receptacles are available having built-in GFCI protection and are able to be used for this measure of safety.
c) Use only with an extension cord for outdoor use, such as an extension cord of cord type SEW, SEOW, SEOOW, SOW, SOOW, STW, STOW, STOOW, SJEW, SJEOW, SJEOOW, SJW, SJOW, SJOOW, SJTW, SJTOW, or SJTOOW.
SAVE THESE INSTRUCTIONS

WARNING: Consult a qualified electrician if you are not certain about the installation process. Always install wiring connections in accordance with local code, ordinances and the National Electric Code.

WARNING: Any changes or modifications to this unit not expressly approved by the party responsible for compliance could void the user's authority to operate the equipment.

CAUTION: RISK OF ELECTRIC SHOCK, Do not use with extension cord near water or where water may accumulate. Keep lamp at least 16 feet from pools and spas. Keep plugs and receptacles dry. For use only on GFCI protected circuits.

FCC STATEMENT

NOTE: This equipment has been tested and found to comply with the limits for a Class B digital device, pursuant to Part 15 of the FCC Rules. These limits are designed to provide reasonable protection against harmful interference in a residential installation. This equipment generates, uses and can radiate radio frequency energy and, if not installed and used in accordance with the instructions, may cause harmful interference to radio communications. However, there is no guarantee that interference will not occur in a particular installation. If this equipment does cause harmful interference to radio or television reception, which can be determined by turning the equipment off and on, the user is encouraged to try to correct the interference by one or more of the following measures:

- Reorient or relocate the receiving antenna.
- Increase the separation between the equipment and receiver.
- Connect the equipment into an outlet on a circuit different from that to which the receiver in connected.
- Consult the dealer or an experienced radio/TV technician for help.

FCC RESPONSIBLE PARTY
THE HOME DEPOT
2455 PACES FERRY ROAD ATLANTA, GA 30339
(770)433-8211

Warranty

3-YEAR LIMITED WARRANTY

If within three years from date of purchase, this Husky product fails due to a defect in materials or workmanship, return the product to any Home Depot retail store with a receipt indicating proof of purchase for replacement with an item of equal or greater value.

This warranty excludes USB, batteries and incidental/inconsequential damages and failures due to misuse, abuse or normal wear and tear. This warranty gives you specific rights, and you may also have other rights, which vary from state to state.

Please see store or call 1-888-HD-HUSKY.

Pre-Installation

PLANNING INSTALLATION

Before you begin to install this lighting fixture, ensure all parts are present. Compare parts with the Hardware Included and Package Contents lists. If any part is missing or damaged, do not attempt to assemble the product.

PACKAGE CONTENTS

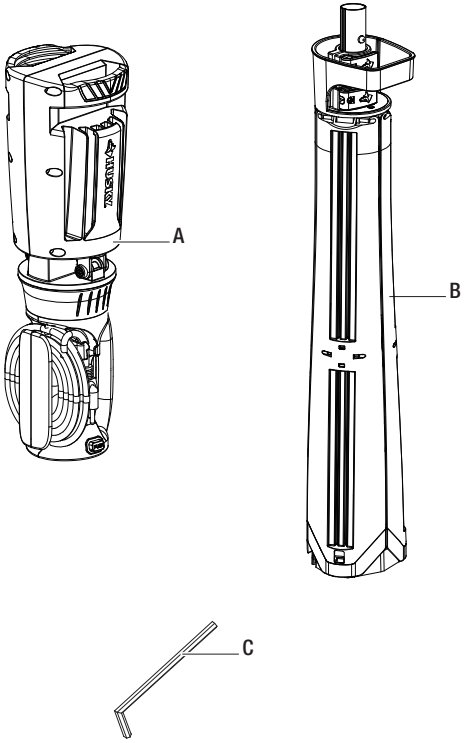

Part	Description	Quantity
A	Work light head	1
B	Work light body	1
C	Wrench	1

Please contact 1-888-434-8759 (1-888-HD-HUSKY) for further assistance.

1 Assemble the work light

- Assemble the work light head (A) to the work light body (B) by aligning the push button and the metal spring buckle.

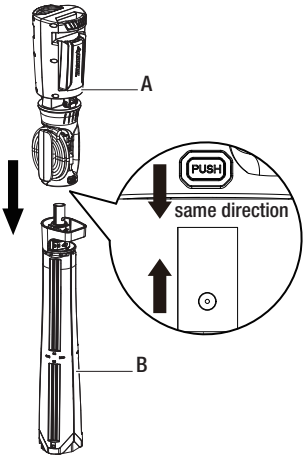

2 Release the tripod extension lock

- To deploy, release the tripod extension lock and lift the light head upward until all three legs release.

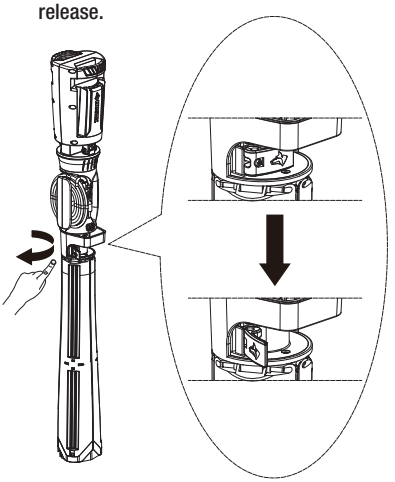

3 Open the tripod

- Shake the bracket to open the tripod.

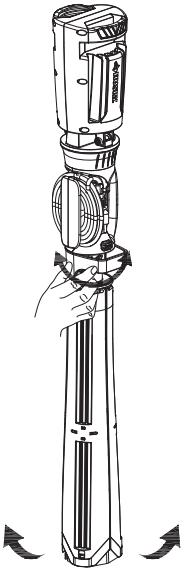

4 Put the light on the ground

- Once all three legs are released, push the light downward until all three legs make contact with the ground.

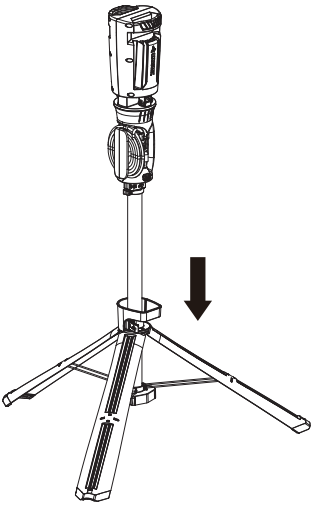

5 Lock the extension lock

- ☐ Once all three legs have made contact with the ground, lock it. To return the legs to the folded position for storage, release the extension lock and pull it back to the original position.

NOTE: Ensure the worklight is not placed on a surface with greater than 8° slope.

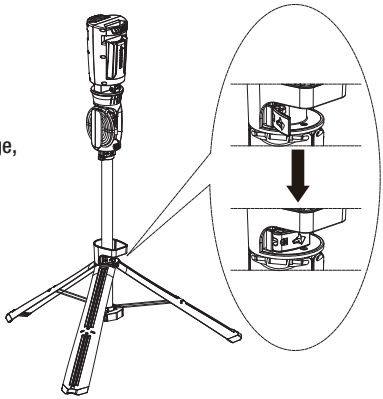

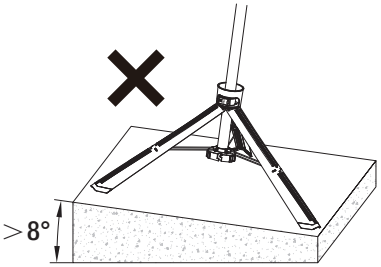

6 Raise the light head

- ☐ Release the top extension lock and raise the light head to the desired height, then lock the top extension lock.

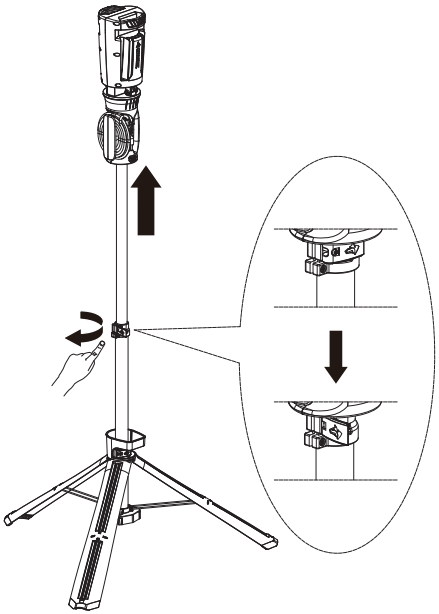

Please contact 1-888-434-8759 (1-888-HD-HUSKY) for further assistance.

7 Adjust the light head

- □ Unfold the light head and adjust to the desired angle.

> **NOTE:** If the light heads are either too loose or tight after adjustment, tighten the screw in the shaft as pictured with the wrench (C) provided.

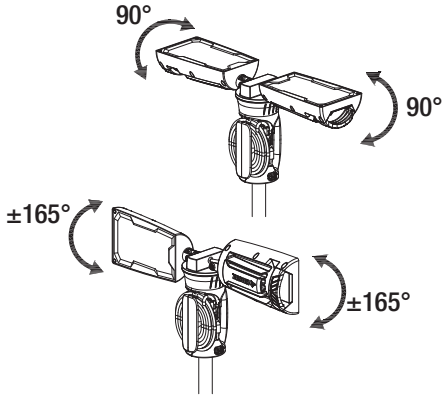

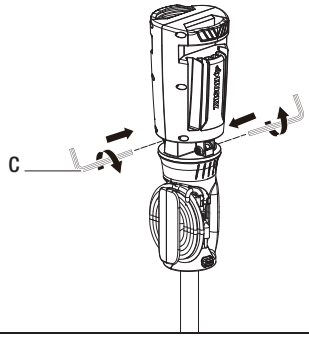

8 Store the wrench

- □ After using, store the wrench (C) in the storage slot next to the light heads.

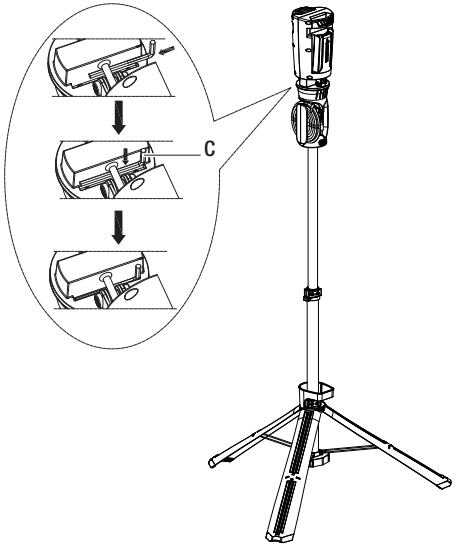

9 Plug the power cord into the outlet

- ☐ Place the power cord in the tripod slot as pictured and plug into the outlet.

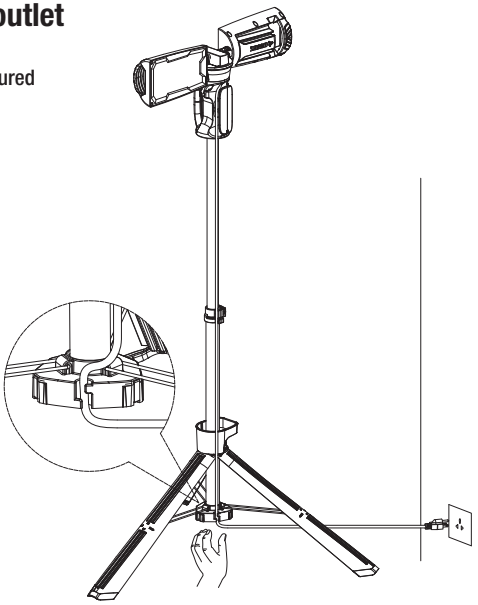

10 Turn on the light

- ☐ Press the rocker switch.

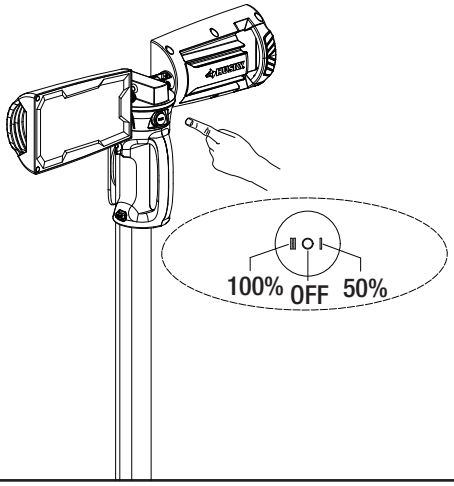

11 Remove the work light head

- ☐ For easy transportation or storage, you can remove the work light head by pressing the push button.

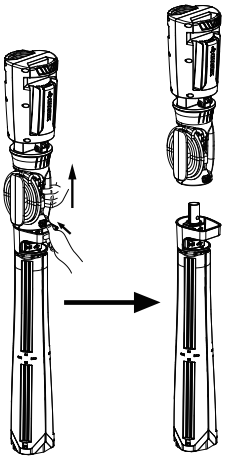

Care and Maintenance

- Your portable LED work light requires very little care and maintenance. Simply clean the lens, lamp head and lamp stand regularly with a non-abrasive cleaner.



WARNING: Always make sure the work light is unplugged and completely cool before attempting to clean it.



WARNING: Allow the work light to cool down completely before storing.

Troubleshooting

Problem	Possible Cause	Solution
The light is not on.	The power is off.	□ Make sure the power supply is on.
	The switch is off.	□ Make sure the switch is on.
	There is poor connection between the cable and outlet.	□ Make sure the connection is OK.



Questions, problems, missing parts? Before returning to the store,
call HUSKY Customer Service
8 a.m. - 7 p.m., EST, Monday-Friday, 9 a.m. - 6 p.m., EST, Saturday

1-888-434-8759 (1-888-HD-HUSKY)

HUSKYTOOLS.COM

Retain this manual for future use.