SURVIVE-A-STORM SHELTERS

Hardware Included

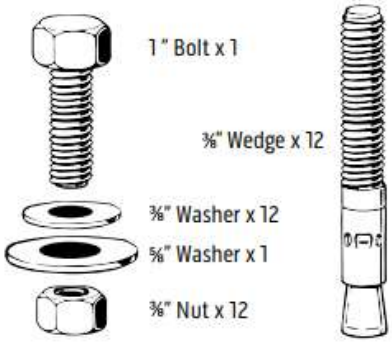

Tools Needed

Hammer
9/16" Socket & Ratchet
⅜" Masonry Bit
Hammer Drill

---

1 - Determine the location to install the shelter. The concrete slab it is to be installed on must be free of major cracks and defects that could compromise the foundation. It is imperative that the foundation meet the engineered specifications. The concrete used in the foundation must be a minimum of 2500 psi concrete. This is generally the minimum psi concrete available, and most concrete is 3000 psi plus by code. If there is doubt about the concrete, consult a local concrete company for testing.
The minimum distance an anchor bolt can be from the edge of foundation is 4''.
2 - Unbolt the shelter from the inside to remove it from the skid. Then, with a pallet jack, forklift, tractor, etc., place the shelter in its desired location. You will notice holes in the bottom interior flange of the Extreme shelter. After the shelter is in the desired location, use a hammerdrill with a 3/8'' masonry bit to drill through the holes in the shelters bottom flange. Drill the holes to approximately 3-¼'' deep into the concrete. (Most hammer drills have a depth guide that can be set to a desired depth). Do not drill too deep. If a vacuum is available use, it to remove the debris from the drilling process, if not then just sweep it out of the way before installing the anchors.
3 - Take the provided anchors, washers, and nuts and place one flat washer on each anchor and then thread the nut on until it is about flush with the top of anchor. Put the anchor into each of the holes and tap completely in with a hammer.
4 - Use a torque wrench and 9/16'' socket to torque the anchors to 25 lbs/ft. After torquing all anchors, it is recommended to repeat the torque process a second time to ensure that all anchors are to 25 lbs/ft.
5 - Remove the Lifting eyelet from the roof of the shelter and replace it with the provided 3/8'' bolt and washer. This is done to eliminate leaking if the shelter is placed outside in the elements.

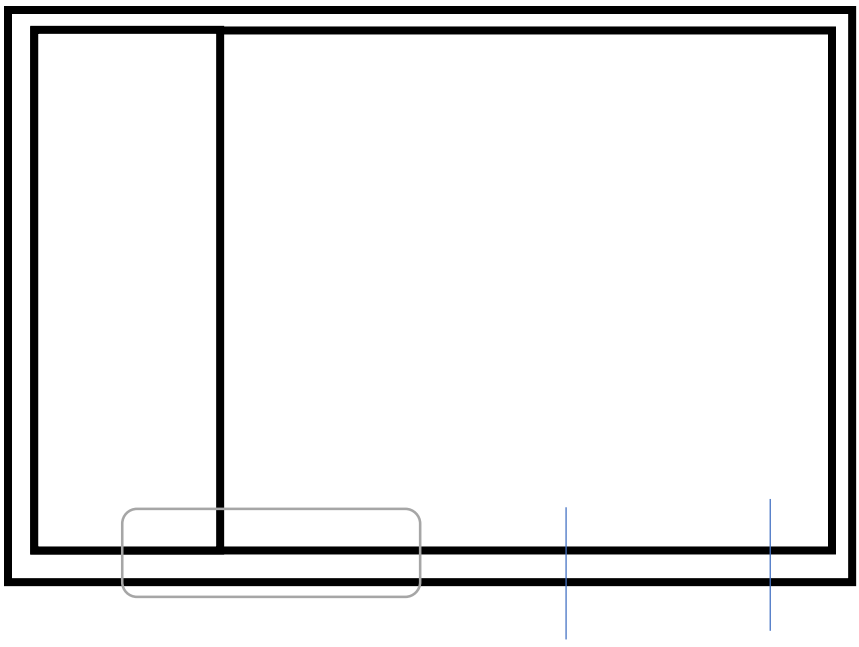

SURVIVE-A-STORM SHELTERS

Hardware Included

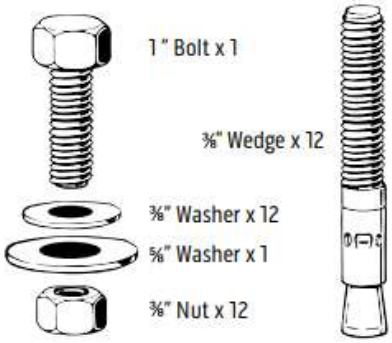

Tools Needed

Hammer
9/16" Socket & Ratchet
⅜" Masonry Bit
Hammer Drill

---

1 - Determine the location to install the shelter. The concrete slab it is to be installed on must be free of major cracks and defects that could compromise the foundation. It is imperative that the foundation meet the engineered specifications. The concrete used in the foundation must be a minimum of 2500 psi concrete. This is generally the minimum psi concrete available, and most concrete is 3000 psi plus by code. If there is doubt about the concrete, consult a local concrete company for testing.
The minimum distance an anchor bolt can be from the edge of foundation is 4''.
2 - Unbolt the shelter from the inside to remove it from the skid. Then, with a pallet jack, forklift, tractor, etc., place the shelter in its desired location. You will notice holes in the bottom interior flange of the Extreme shelter. After the shelter is in the desired location, use a hammerdrill with a 3/8'' masonry bit to drill through the holes in the shelters bottom flange. Drill the holes to approximately 3-¼'' deep into the concrete. (Most hammer drills have a depth guide that can be set to a desired depth). Do not drill too deep. If a vacuum is available use, it to remove the debris from the drilling process, if not then just sweep it out of the way before installing the anchors.

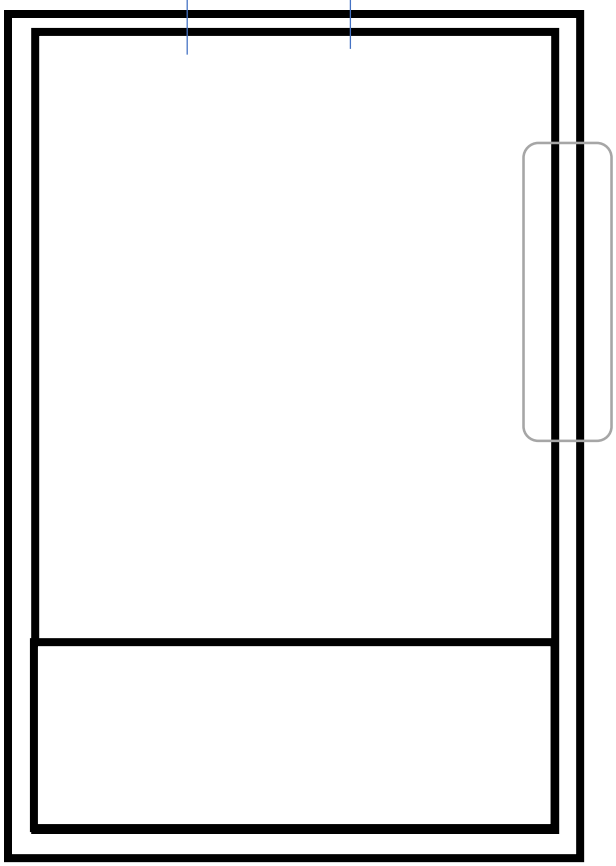

3 - Take the provided anchors, washers, and nuts and place one flat washer on each anchor and then thread the nut on until it is about flush with the top of anchor. Put the anchor into each of the holes and tap completely in with a hammer.
4 - Use a torque wrench and 9/16'' socket to torque the anchors to 25 lbs/ft. After torquing all anchors, it is recommended to repeat the torque process a second time to ensure that all anchors are to 25 lbs/ft.
5 - Remove the Lifting eyelet from the roof of the shelter and replace it with the provided 3/8'' bolt and washer. This is done to eliminate leaking if the shelter is placed outside in the elements.