VERSAILLES 36” CONSOLE

Cat. No.
PGVCS

BARCLAY



Features:

►Fine Fire Clay for Durability
►Large Deck
►Mounting Hardware Included



Colors:
WH White

Compliance Certification
Meets or exceeds the following specifications: ASME 112.19.2.2018 for Fire Clay fixtures.

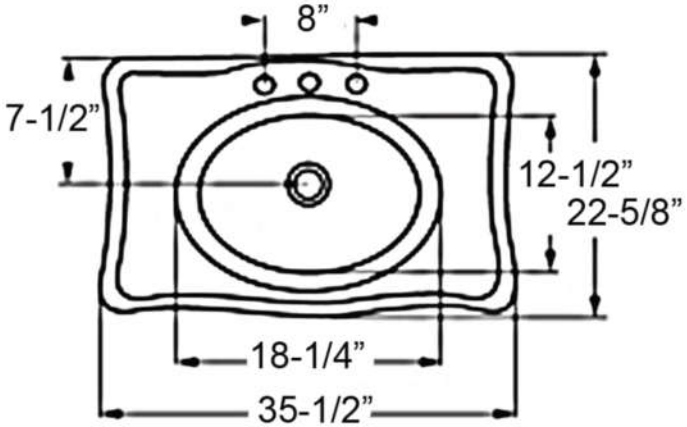

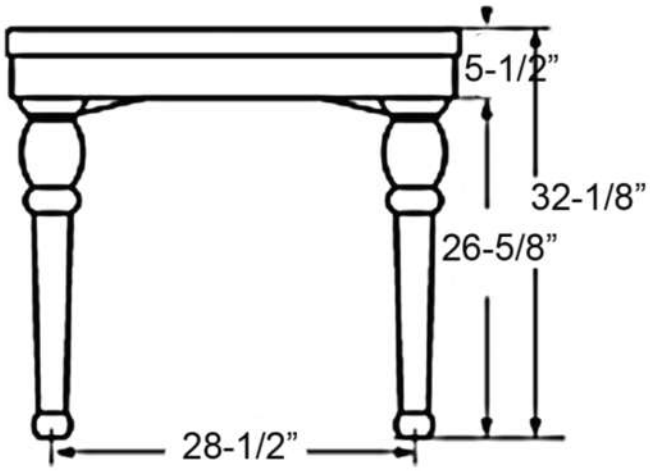

36” console side deck:	6-½”
Back of basin to center of faucet:	2-½”
Back of basin to center of drain:	7-½”
Mount bolts height:	29-¼” x 19”
Faucet and spout holes:	1-⅜”

Interior Dimensions:

Basin Interior:	18-¼” x 12-½”
Basin Height:	9-¼” overall
Bowl Depth:	6-¾”

Dimensions of fixture are nominal and may vary within the range of tolerances established by ANSI Standard A112.19.2. Dimensions and specifications subject to change without notice.

P 847•244•1234 | www.barclayproducts.com