Pre-installation

Please read and understand all sections in this manual before you begin the installation of your laminate flooring.

SAFETY INFORMATION
READ ALL INSTRUCTIONS BEFORE INSTALLATION.

MANUFACTURER'S REQUIRED MINNESOTA DISCLOSURE – IMPORTANT HEALTH NOTICE: SOME OF THE BUILDING MATERIALS USED IN THIS HOME (OR THESE BUILDING MATERIALS) EMIT FORMALDEHYDE. EYE, NOSE, AND THROAT IRRITATION, HEADACHE, NAUSEA AND A VARIETY OF ASTHMA-LIKE SYMPTOMS, INCLUDING SHORTNESS OF BREATH, HAVE BEEN REPORTED AS A RESULT OF FORMALDEHYDE EXPOSURE. ELDERLY PERSONS AND YOUNG CHILDREN, AS WELL AS ANYONE WITH A HISTORY OF ASTHMA, ALLERGIES OR LUNG PROBLEMS, MAY BE AT GREATER RISK. RESEARCH IS CONTINUING ON THE POSSIBLE LONG-TERM EFFECTS OF EXPOSURE TO FORMALDEHYDE.

REDUCED VENTILATION MAY ALLOW FORMALDEHYDE AND OTHER CONTAMINANTS TO ACCUMULATE IN THE INDOOR AIR. HIGH INDOOR TEMPERATURES AND HUMIDITY RAISE FORMALDEHYDE LEVELS. WHEN A HOME IS TO BE LOCATED IN AREAS SUBJECT TO EXTREME SUMMER TEMPERATURES, AN AIR-CONDITIONING SYSTEM CAN BE USED TO CONTROL INDOOR TEMPERATURE LEVELS. OTHER MEANS OF CONTROLLED MECHANICAL VENTILATION CAN BE USED TO REDUCE LEVELS OF FORMALDEHYDE AND OTHER INDOOR CONTAMINANTS. IF YOU HAVE ANY QUESTIONS REGARDING THE HEALTH EFFECTS OF FORMALDEHYDE, CONSULT YOUR DOCTOR OR LOCAL HEALTH DEPARTMENT.

IMPORTANT: Home Decorators Collection laminate flooring is intended for a floating installation only. Do not glue, nail, or attach in any other way to your existing subfloor. Cabinets and kitchen islands should be installed prior to the laminate flooring.

CAUTION:
- □ Use safety glasses and gloves when cutting laminate floors. Laminate floors will create wood dust; always cut the product in a well-ventilated area.
- □ Never tap long edges; tap only as instructed.
- □ Never use tools designed for other laminate flooring installation systems.
- □ Never wax, polish, or use abrasive cleaners on laminate floors.
- □ This laminate flooring product is not suitable for use in areas where the floor is prone to continuous moisture, such as but not limited to, steam rooms and saunas. Do not install in rooms that have floor drains or sump pumps.

WARRANTY

Home Decorators Collection offers a limited warranty against manufacturing defects from date of purchase on this product. Home Decorators Collection guarantees that:

- □ The decorative laminate surface will not wear through.
- □ The surface of the plank will resist staining.
- □ The surface of the plank will not fade or discolor, due to natural or artificial lighting.
- □ The flooring will resist moisture due to mopping and everyday household spills for a period of up to 24 hours.

TOOLS REQUIRED

- □ Table or circular saw
- □ Measuring tape
- □ Carpenter's square
- □ Utility knife
- □ Safety glasses
- □ Dust mask (NIOSH-designated)
- □ Gloves
- □ Pencil/marker
- □ Pull bar
- □ 3/8 in. (10 mm) thick spacers
- □ Tap block
- □ Hammer
- □ Laminate floor underlayment
- □ 6 mil (0.15 mm) thick vapor barrier if installing over concrete
- □ 2 in. (51 mm) wide moisture-resistant adhesive tape
- □ Flexible 100% silicone caulking (if installing in wet areas)
- □ 1/2 in. (12 mm) and 3/8 in. (10 mm) compressible PE foam backer rod (if installing in wet areas)

ACCLIMATION AND STORAGE

Store flooring indoors in a climate controlled environment. Do not store in sheds, garages, or directly on cement floors. If stored on cement surface, place vapor barrier down and elevate flooring to allow for circulation.
Allow 48 hours (96 hours in very dry or humid conditions) for your flooring to acclimate to the conditions of the installation area before opening the cartons. Cross-stack unopened cartons in the installation area, away from outside walls, heat, and air conditioning vents. Installation temperatures should be at a minimum of 60°F (16°C) to 80°F (27°C) with a relative humidity of 35% – 75%.

EXPANSION CONSIDERATIONS

Home Decorators Collection laminate floors expand and contract with changes in relative humidity. For this reason, leave a 3/8 in. (10 mm) expansion space around the perimeter of the room and all other objects such as toe kicks and plumbing. The expansion space will be covered by wall base moldings or quarter rounds once the floor is installed.

MAXIMUM ROOM SIZE / ADJACENT ROOMS

Home Decorators Collection laminate floors can be installed in a single room up to 40 ft. (12 m) in length and 40 ft. (12 m) in width. Installations in rooms that are over the maximum allowable length and width must use T-moldings. Also use T-moldings when installing laminate floors to separate adjacent rooms (i.e. through doorways).

INSTALLATION LAYOUT

There are no rules when it comes to the layout of your installation. Typically, laminate flooring installations are laid out parallel to the longest wall in the room or perpendicular to the main window in the room.

Subfloor Preparation

Home Decorators Collection laminate floors can be installed over many types of subfloors as long as they are properly prepared and meet the required criteria outlined in this section.

GENERAL SUBFLOOR PREPARATION AND PRECAUTIONS

- □ Subfloors must be clean and free of dirt and debris prior to installation.
- □ Subfloors must be structurally sound prior to installation.
- □ Carpet is not a suitable underlay for laminate floors. All carpet, carpet pad, and carpet tack should beremoved prior to installation.
- □ Variations in the subfloor flatness should not exceed 3/16 in. per 10 ft. (2 mm/m). Floors must be leveled to meet this specification prior to installation. Level by filling depressed areas with flooring leveling compound and sanding or grinding down any raised areas.
- □ Installations over hydronic radiant heated subfloors are acceptable but temperatures should never exceed 80°F (27°C). Radiant heat systems must be operating for a minimum of 3 weeks prior to installation of Home Decorators Collection laminate floors to ensure the subfloor meets the moisture requirements.

Note: This floor is water resistant but not waterproof. Moisture intrusions from concrete hydrostatic pressure, flooding, or plumbing leaks can affect laminate flooring. High moisture can also be trapped below the flooring and create mildew or mold. The installer is responsible for making sure the subfloor moisture content is suitable prior to installation.

WOOD SUBFLOOR PREPARATION

- □ Subfloor moisture must be tested prior to installation and should not exceed 12% through the installation area.
- □ Wood subfloors must be structurally sound and screwed or nailed to supporting beams.
- □ Crawl spaces should be dry, vented, and meet applicable building codes.
- □ Underlay must be installed prior to installing the laminate floors.
- □ Underlay edges should not be overlapped. Butt end edges together and seal with adhesive tape.

CONCRETE SUBFLOOR PREPARATION

- □ Concrete subfloors must be properly cured and allowed to dry for at least 60 days prior to installation. Test the concrete subfloor for moisture prior to installation. To do so:
  1. Tape 3 ft. x 3 ft. (91 cm x 91 cm) pieces of polyethylene vapor barrier to the subfloor.
  2. If condensation appears on the film after 24 hours or concrete appears dark in color, moisture is likely present and a Calcium Chloride test must be performed.
  3. The maximum allowable moisture emission is 5.0 lbs/1000 ft^2 per 24 hours (2.26 kg/101.6 m^2 per 24 hours).
- □ A 0.12 in. (3 mm) thick underlay and 6 mil (0.15 mm) polyethylene vapor barrier must be used when installing over concrete.
- □ Overlap vapor barrier edges by 8 in. (20 cm) and seal with moisture resistant adhesive tape.
- □ Run the vapor barrier ¾ in. (2 cm) up the wall and trim after the wall base is installed.
- □ The underlay must be installed prior to installation of laminate floors.
- □ Do not overlap underlay edges. Butt end edges together and seal with adhesive tape.

VINYL (SHEET/TILE), LINOLEUM, AND CERAMIC TILE SUBFLOOR PREPARATION

- □ If vinyl, linoleum, or ceramic tile is installed over concrete, install a 6 mil (0.15 mm) vapor barrier over it:
  - □ Overlap vapor barrier edges by 8 in. (20 cm) up the wall and trim after the wall base is installed.
  - □ Run the vapor barrier ¾ in. (2 cm) up the wall and trim after the wall base is installed.
- □ Underlay must be installed prior to installing the laminate floors.
- □ Underlay edges should not be overlapped. Butt end edges together and seal with adhesive tape.

Room Preparation

WALL BASE/TRIM

- □ Removal of the existing wall base/trim is optional. If the existing wall base/trim is not removed, leave the required expansion space in front of the existing wall base/trim.
- □ Install wall base or trim after the flooring installation is complete to cover the expansion space around the perimeter of the room.
- □ Always nail/adhere the wall base and trim to the wall. Never nail/adhere it to the laminate flooring.

DOORS/DOOR JAMBS

- □ Undercut door jambs so that the laminate floor can be installed under them. To do this, use a laminate flooring off-cut and a small piece of underlay to support a hand saw blade at the correct height for undercutting.
- □ Check the door clearances and make any necessary height adjustments before installing laminate floors.
- □ Leave the correct expansion spacing under the door jamb.

WALL IRREGULARITIES

Walls are not always perfectly straight. Home Decorators Collection laminate floors need to be cut so as to fit within the irregularities of your walls. Complete these steps:

1. Install the first row of laminate floors (following the Installation section) and ensure that all long edges of the laminate flooring planks are aligned.
2. Slide the whole row against the wall. You will now notice any irregularities (areas where the wall is not straight).
3. Trace the contour of the wall onto the row of laminate flooring with a pencil or marker.
4. Once traced, uninstall the planks carefully so as not to damage the locking system and cut along the traced line.
5. Re-install the plank, leaving the necessary 3/8 in. (10 mm) expansion space.

Preparing for Installation

Before you begin the steps in the Installation section, ensure you have completed the following:

- □ Sort planks before installation to avoid plank repetition and to achieve the most natural and varied results.
- □ Inspect every plank for damage before installing it.
- □ The first and last row of the installation should be wider than 3.5 in. (9 cm):
  - □ Measure the width of the room and divide it by the width of the planks you are installing.
  - □ If the remainder is less than 3.5 in. (9 cm), cut 3.5 in. (9 cm) from the width of the first row. If this is not possible, ensure that both edge planks are as even in width as possible.
- □ The first and last plank in a row should be a minimum of 16 in. (40 cm) long.
- □ Stagger the planks from row to row by a minimum of 16 in. (40 cm).
- □ Use spacers to maintain the 3/8 in. (10 cm) expansion space between the planks and walls/vertical objects.
- □ Select a starting corner of the room and work from left to right.
- □ Remove tongues and grooves from long edges of planks that will be installed adjacent to walls.

TIP: It is often easiest to start at the door of the room so that the first plank can be easily slid under the door jamb.

Installation

1 INSTALLING THE FIRST ROW

□ Cut a plank into three sections as shown in Figure 1A below
Section A - approx. 8 in. (20 cm) to be used to tap against (refer to Figure 1C)
Section B - approx. 16 in. (40 cm) to help with aligning planks (refer to Figure 1C)
Section C - remainder of plank to be used as first plank of the installation (refer to Figure 1C)
□ Lay the first plank (First Plank Section C) with the long edge tongue facing the wall.
□ Lift the right side of the second plank to a 30 degree angle and place its short end tongue into the groove of the first plank.
□ Lower the plank to lock the two together. Ensure end joints are tight.
□ Using a tap block and a piece of plank (First Plank Section A) and hammer, lightly tap the end of the plank to engage the plank ends together.
□ Continue in this manner until the first row is complete.
□ Use the remainder of the last plank of the first row to start the second row provided that it is a minimum of 16 in. (40 cm) long.
□ If the cut piece is shorter than 16 in. (40 cm) long, cut a new plank in half and use it to begin the second row.

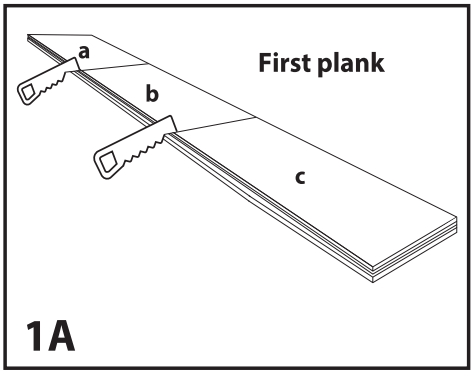

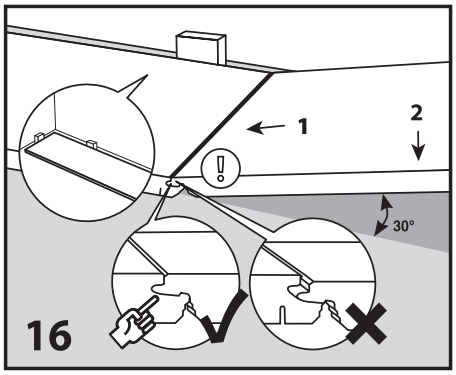

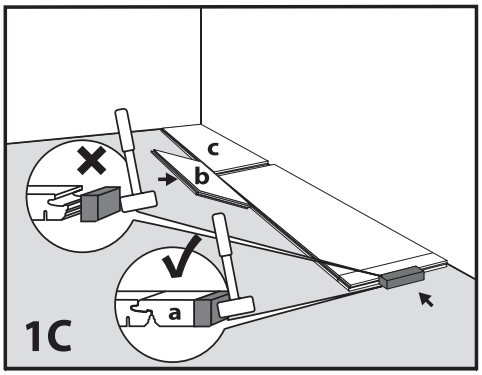

2 INSTALLING THE REMAINING ROWS

□ Install the first plank of the second row by inserting its long edge tongue to the previous row‘s long edge groove at a 30 degree angle.
□ Lower the plank to lock it in place. Ensure 3/8 in. (10 mm) expansion space is left between plank edge and wall.
□ Install the second plank of the second row so that when it is lowered the adjacent short edges are approximately 1/2 in. (12 mm) apart.
□ Using a tap block and a piece of plank (First Plank Section A) and hammer, lightly tap the end of the plank to engage the plank ends together.
TIP: To ensure plank alignment, use a 16 in. (40 cm) scrap piece (First Plank Section B) of flooring along side.
□ Continue in this manner until the row is complete. Use a pullbar instead of a tap block on the last plank
□ of each row. Ensure 3/8 in. (10 mm) expansion space is left between plank edge and wall.
□ Continue in this manner until you have completed your installation.
□ When you are finished installing all rows, remove all wall spacers and install wall base and applicable moldings/transitions.

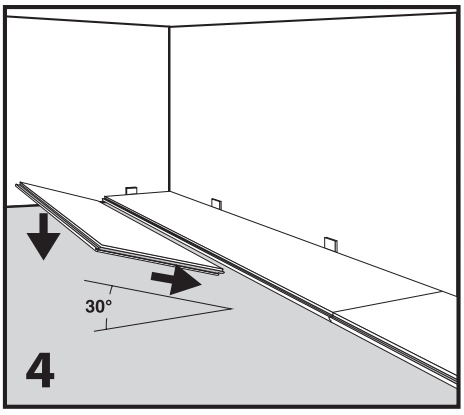

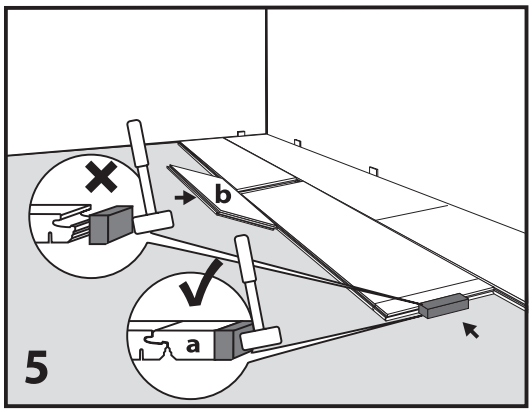

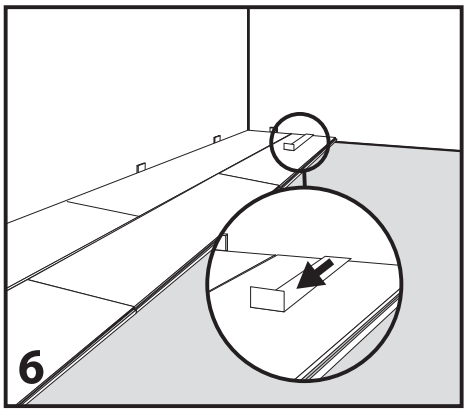

3 WET AREA INSTALLATION

□ When installing in wet areas such as kitchens, bathrooms, laundry rooms and entrances, seal all expansion spaces with a 100% flexible silicone caulk and compressible PE foam backer rod.

NOTE: do not use acrylic based caulks as they are rigid and will prevent the floor from expanding/contracting.

□ Insert 1/2 in. (12 mm) compressible PE foam backer rod into room perimeter expansion space and cover completely with flexible silicone caulk.

□ Insert 3/8 in. (10 mm) compressible PE foam backer rod at transitions and cover completely with flexible silicone caulk.

□ Use silicone only at door frames and other fixed objects such as plumbing.

□ Install base boards, quarter rounds and/or other moldings and immediately wipe up excess caulk.

□ Ensure based boards or quarter rounds are attached to walls, not the floors.

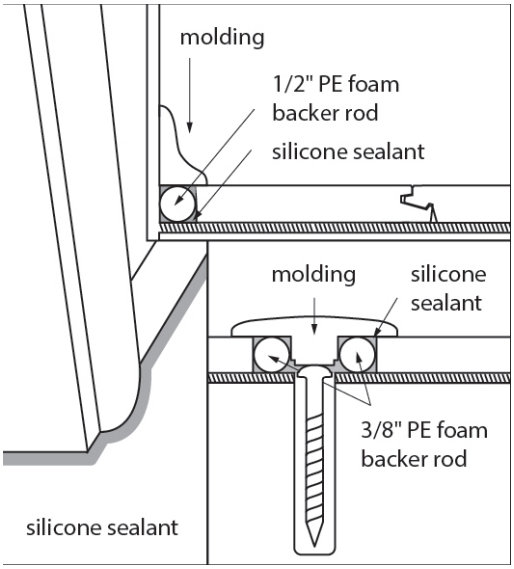

Care and Cleaning

GENERAL CARE

□ Place mats and area rugs at main entrances to minimize abrasive debris that may be tracked in on shoes.

□ Place protective pads under furniture legs and other movable furniture.

□ Use protective mats under wheeled office-type chairs.

□ Avoid using lacquers, polishes, waxes or detergent-based cleaners as they will leave a film on the surface of the floor and may cause irreparable damage. The surface of this flooring does not require refinishing and will maintain its original appearance.

□ Never use abrasive cleaners.

□ This laminate flooring is water-resistant, but not waterproof. Care should be taken whenever the potential for moisture exposure is present.

□ Do not leave a steam cleaner in the on position in one place for prolonged periods.

DAILY CLEANING

□ Use a dust mop or vacuum with a hard surface attachment to remove dust, loose dirt, or debris.

□ For a more thorough cleaning, where a cleaning solution may be required, use a water-based laminate floor cleaner. Lightly mist the cleaner into the soiled surface and wipe up immediately.