Parts drawing for DXCMH9919910

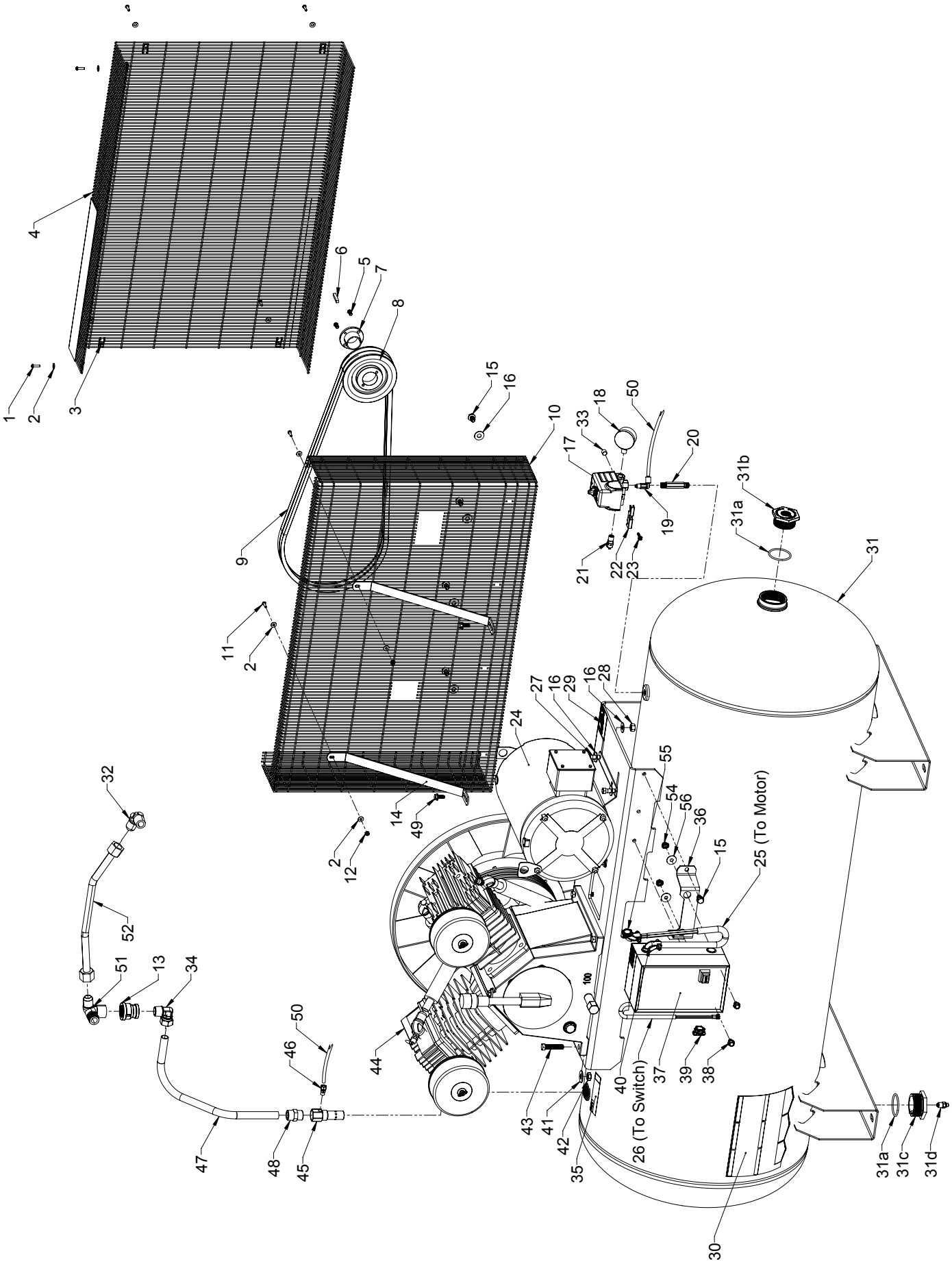

Parts list for DXCMH9919910

Item Number	Part No.	Description	Qty. Required
1	061-0152	Screw, #10-14 x 3/4”	6
2	060-0146	Washer, #10	10
3	103-0176	U-nut, spring #10	6
4	125-0226	Beltguard *(outer)*	1
5	N/A *(Order item #7)*	Screw, 1/4” x 3/4” lg	2
6	146-0007	Key 5/16” x 3/16” x 1 1/4” lg	1
7	004-0002	Hub *(includes item 5)*	1
8	006-0161	Pulley	1
9	008-0040	V–belt, B64	2
10	125-0217	Beltguard *(inner)*	1
11	061-0212	Screw, #10-32 x 3/4”.	2
12	058-0158	Nut, 10-32	2
13	063-0045	Reducer coupling, 1” x 3/4”	1
14	114-0349	Bracket, belt guard	2
15	059-0164	Bolt, lock 3/8-16 x 3/4” lg	6
16	060-0023	Washer, 3/8”	12
17	034-0199	Switch, pressure *(includes items 19 & 22-23)*	1
18	032-0025	Gauge, 300 PSI	1
19	136-0090	Valve, bleeder	1
20	065-0005	Nipple, 1/4” NPT x 2 1/2” lg	1
21	136-0007	Valve, relief, 200 PSI	1
22	071-0033	Strain relief	1
23	061-0216	Screw	1
24	160-0347	Motor, Baldor 230/460V	1
25	026-0189	Cord, interconnect 10/4	1
26	026-0223	Cord, interconnect 14/3	1
27	059-1007	Bolt, 3/8 x 1” lg	4
28	058-0009	Nut, 3/8”	4
29	098-3031	Label, warning	1
30	098-3870	Label, warning	1
31	515-0358	Tank assy *(includes items 31a-31d)*	1
31a	*513-0001*	*O-Ring 2”*	*2*
31b	*512-0043*	*Bushing, 2” NPSM x 3/4” NPT*	*1*
31c	*512-0041*	*Bushing, 2” NPSM x 1/4” NPT*	*1*
31d	*072-0006*	*Drain valve*	*1*
32	064-0121	Elbow	1
33	062-0035	Plug, 1/4”	1
34	064-0032	Elbow, 90°	1
35	098-2856	Label, warning	1
36	114-0849	Bracket	2
37	001-0169	Magnetic starter, 10 HP, 3 PH	1
38	059-0012	Screw, 5/16” x 1/2”	2
39	071-0002	Strain relief, 3/8” straight	1
40	071-0003	Strain relief, 3/8” 90°	2
41	060-0182	Washer, 7/16”	4
42	058-0011	Nut, 7/16”	4
43	059-0061	Bolt, 7/16 x 2”	4
44	*See pages 5-7*	Pump assy	1
45	031-0020	Check valve, flared	1

Parts list for DXCMH9919910

Item Number	Part No.	Description	Qty. Required
46	068-0002	Connector	1
47	145-0683	Tube, transfer	1
48	068-0003	Connector	1
49	059-0389	Screw, 5/16”-18	2
50	145-0658	Tube, bleeder (*also order 058-0017, qty 1)*	1
51	064-0124	Elbow	1
52	145-0665	Tube, outlet	1
53	094-0137	Vibration pads *(not shown)*	4
54	058-0125	Nut, 5/16-18	1
55	060-0201	Washer 1” to 1/2” Conduit *(Baldor motor)*	5
56	060-0202	Washer 5/16” x 1”	1
N/A	*Items are not available as replacement parts.*		

Parts drawing for pump S040-0453 (HB100)

PUMP - S040-0453 Specifications	
Weight	Approx. 205 Lbs.
Oil Capacity	104 oz / (2948 grams)
Lubrication	Full Synthetic, non-detergent, air compressor oil
Max RPM	850

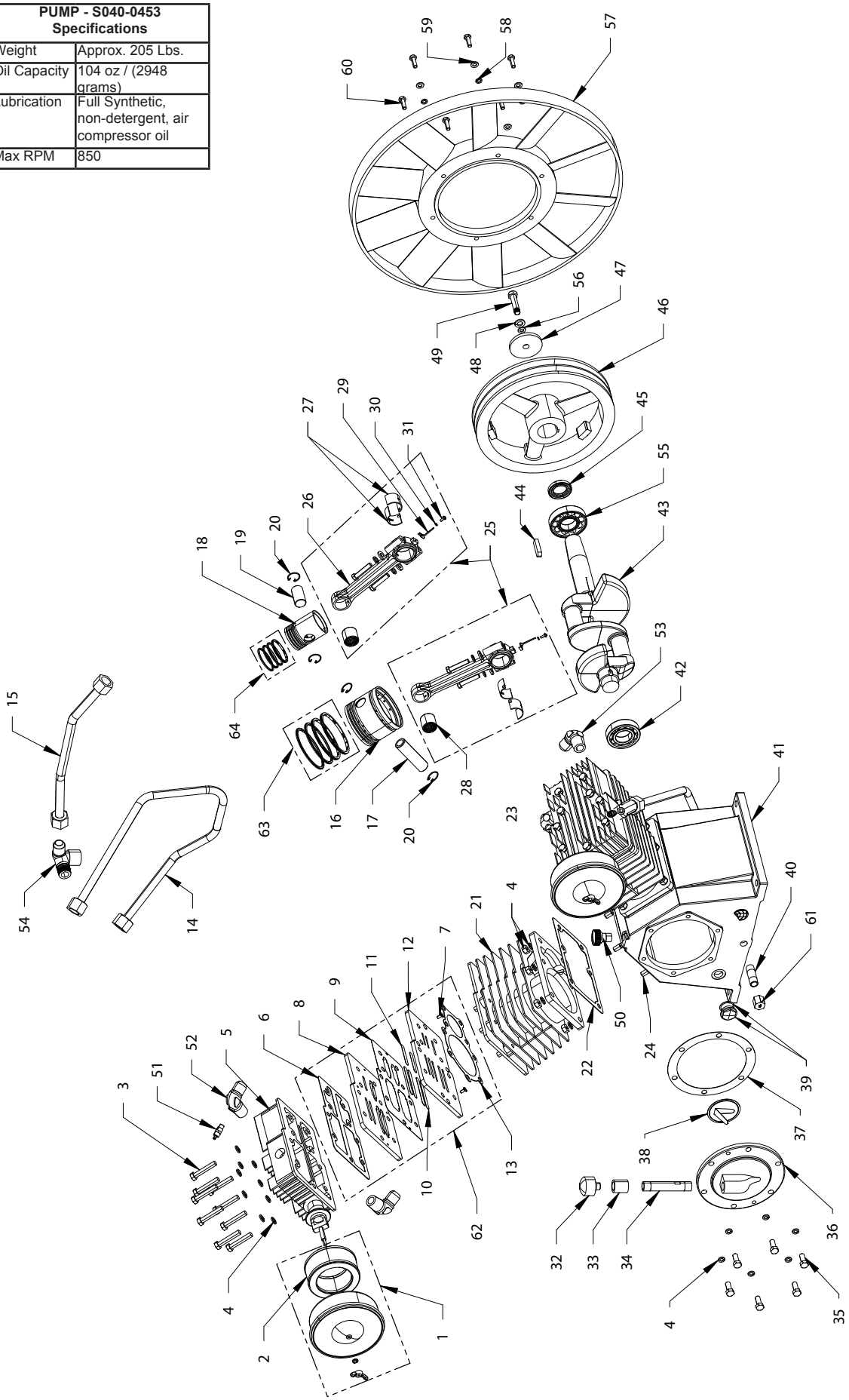

Parts list for pump S040-0453 (HB100)

Item Number	Part No.	Description	Qty. Required
1	019-0294	Filter, cannister assy (*includes item 2)*	2
2	019-0295	Element, filter replacement	2
3	059-0405	Bolt, head, M10 x 90 mm lg	18
4	060-0209	Washer, lock M10	36
5	042-0136	Head, cylinder	2
6	046-0336	Gasket, cylinder head	2
7	N/A *(Order item #62)*	Bolt, M5 x 12 mm lg	8
8	N/A *(Order item #62)*	Seat, valve (upper)	2
9	046-0337	Gasket, valve plate	2
10	N/A *(Order item #62)*	Reed valve, LP	8
11	N/A *(Order item #62)*	Reed valve, HP	4
12	N/A *(Order item #62)*	Seat, valve (lower)	2
13	046-0338	Gasket, valve cylinder	2
14	145-0666	Tube, outlet	2
15	145-0665	Tube, outlet	1
16	048-0135	Piston, low pressure	2
17	052-0042	Pin, wrist, low pressure	2
18	048-0136	Piston, high pressure	2
19	052-0043	Pin, wrist, high pressure	2
20	054-0268	Retaining ring	8
21	050-0072	Cylinder	2
22	046-0339	Gasket, cylinder/crankcase	2
23	058-0185	Nut, M10	12
24	059-0406	Bolt, M10 x 30 mm lg	12
25	047-0101	Connecting rod assembly	4
26	N/A *(Order item #25)*	Connecting rod	4
27	051-0111	Insert, bearing	4 pair
28	051-0112	Needle bearing	4
29	N/A *(Order item #25)*	Oil dipper	4
30	N/A *(Order item #25)*	Washer, spring	4
31	N/A *(Order item #25)*	Bolt, M5 x 10 mm lg	4
32	059-0097	Breather cap	1
33	068-0104	Connector	1
34	065-0112	Breather tube	1
35	059-0407	Bolt, M10 x 30 mm lg	6
36	045-0057	Bearing carrier, rear	1
37	046-0340	Gasket, bearing carrier	1
38	019-0297	Filter, oil screen	1
39	032-0127	Oil level sight glass	1
40	065-0101	Nipple, 1/2” x 3”	1
41	049-0057	Crankcase	1
42	051-0113	Bearing	1
43	053-0117	Crankshaft	1
44 **	146-0034	Key, flywheel	1
45	046-0343	Oil seal	1
46 **	044-0077	Flywheel, 12”	1
47 **	060-0213	Washer, flywheel	1
48 **	060-0214	Washer, flywheel #12	1
49 **	059-0409	Bolt, M12 x 35 mm lg	1

Parts list for pump S040-0453 (HB100)

Item Number	Part No.	Description	Qty. Required
50	062-0074	Plug	1
51	136-0105	Valve, pressure relief	2
52	064-0122	Elbow	2
53	064-0121	Elbow	3
54	064-0124	Elbow, 3	1
55	051-0114	Bearing	1
56 **	060-0215	Washer, spring #12	1
57 **	027-0053	Fan blade	1
58 **	060-0216	Washer, spring #8	6
59 **	060-0212	Washer, #8	6
60 **	059-0411	Bolt, M8 x 30 mm lg	6
61	062-0078	Pipe cap, 1/2”	1
62	043-0228	Valve plate assembly *(includes 1 each - items 6-13)*	2
63	054-0266	Ring set, LP	2
64	054-0267	Ring set, HP	2
Available Service Kits			
65	046-0344	Gaskets, complete set *(includes items 6, 9, 13, 22, 37 & 45)*	1
66	165-0305	Overhaul kit *(includes items 2, 22, 27, 37 & 62-64)*	1
67	S040-0453	Pump assy *(includes items 1-43, 45, 50-55 & 61)*	1
*** Must be purchased separately*			
N/A Items are not available as replacement parts.			

Item 65

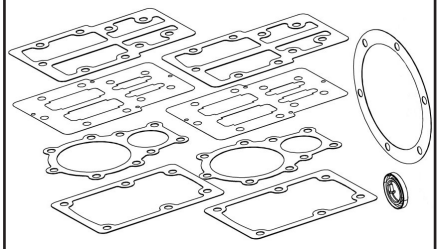

Item 66

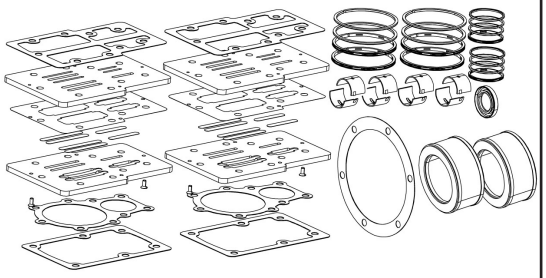
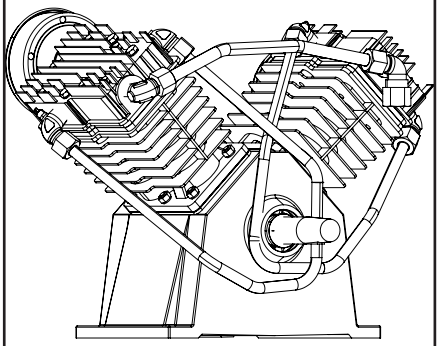
Item 67