Assembly Instructions

Caution: You must read this before you proceed

Please look in the magic tape pouch for hardware packs and legs

LEFT ARM SOFA

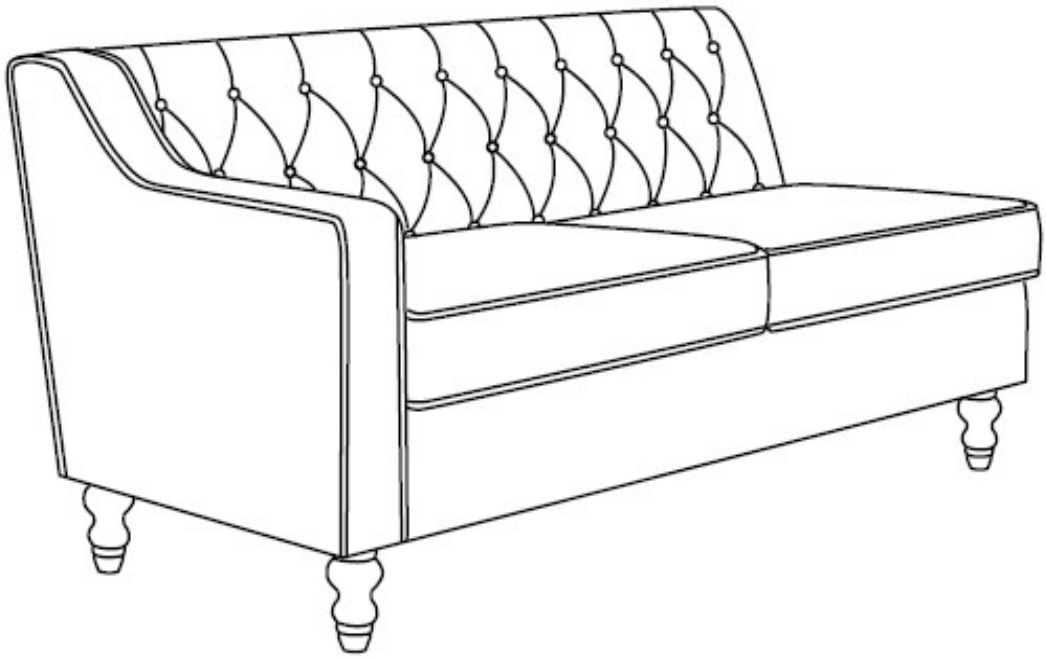

Part List

Label	Picture	Description	QTY
A	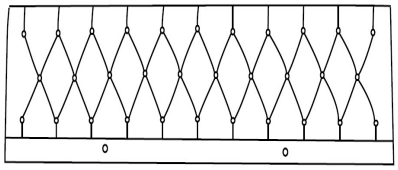	Backrest	1
B		Left Armrest	1
C		Side Panel	1
D	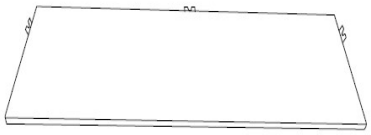	Seat	1
E		Front Rail	1
F	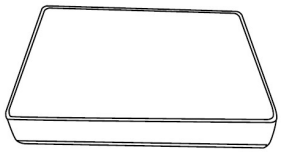	Seat Cushion	2
G		Leg	4

Hardware List

Label	Picture	Description	QTY
①		Plastic Washer	7
②		Allen Wrench	1
③		Bolt(M8*25)	3
④		Bolt(M8*40)	3
⑤		Flat Washer Ring	5
⑥		Spring Washer Ring	5

Assembly Preparation

Before Beginning Assembly:

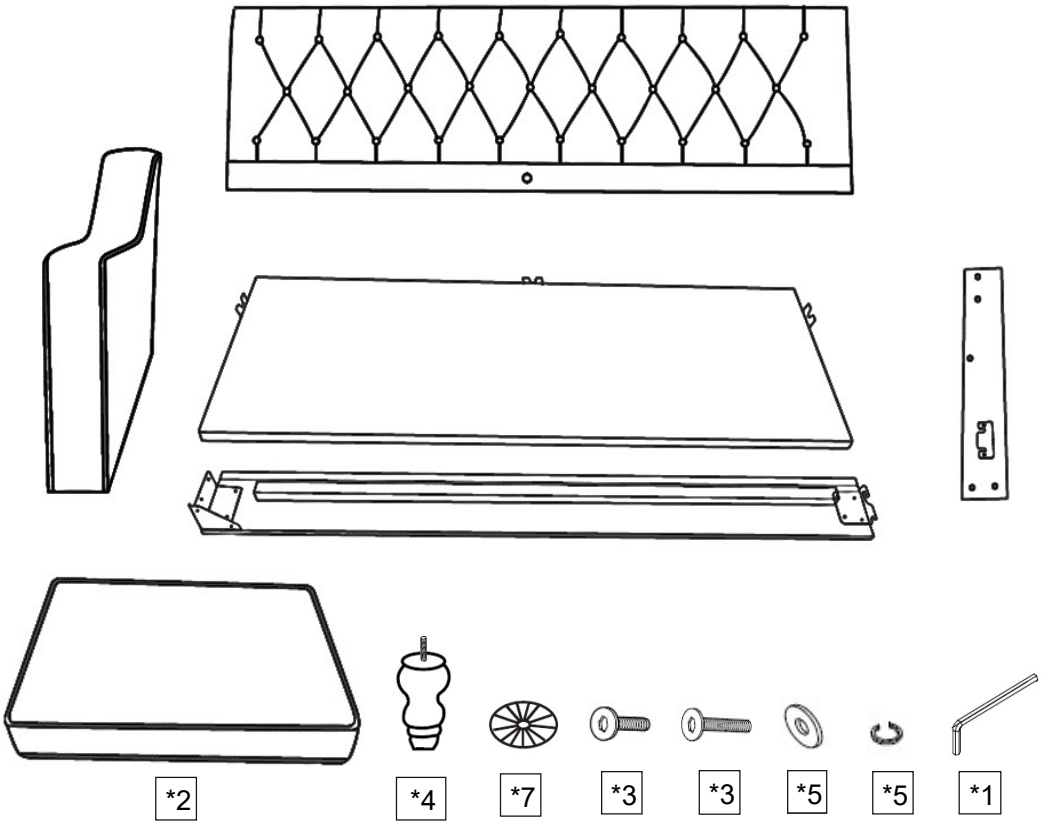

- Read instructions, cover to cover-
- Have 2 adults on hand for assembly-
- Do not assemble on flooring or carpet-
- Assemble on a clean non-marring surface (packing foam)-
- Save all packaging until finished-

Assembly Steps

OVERVIEW

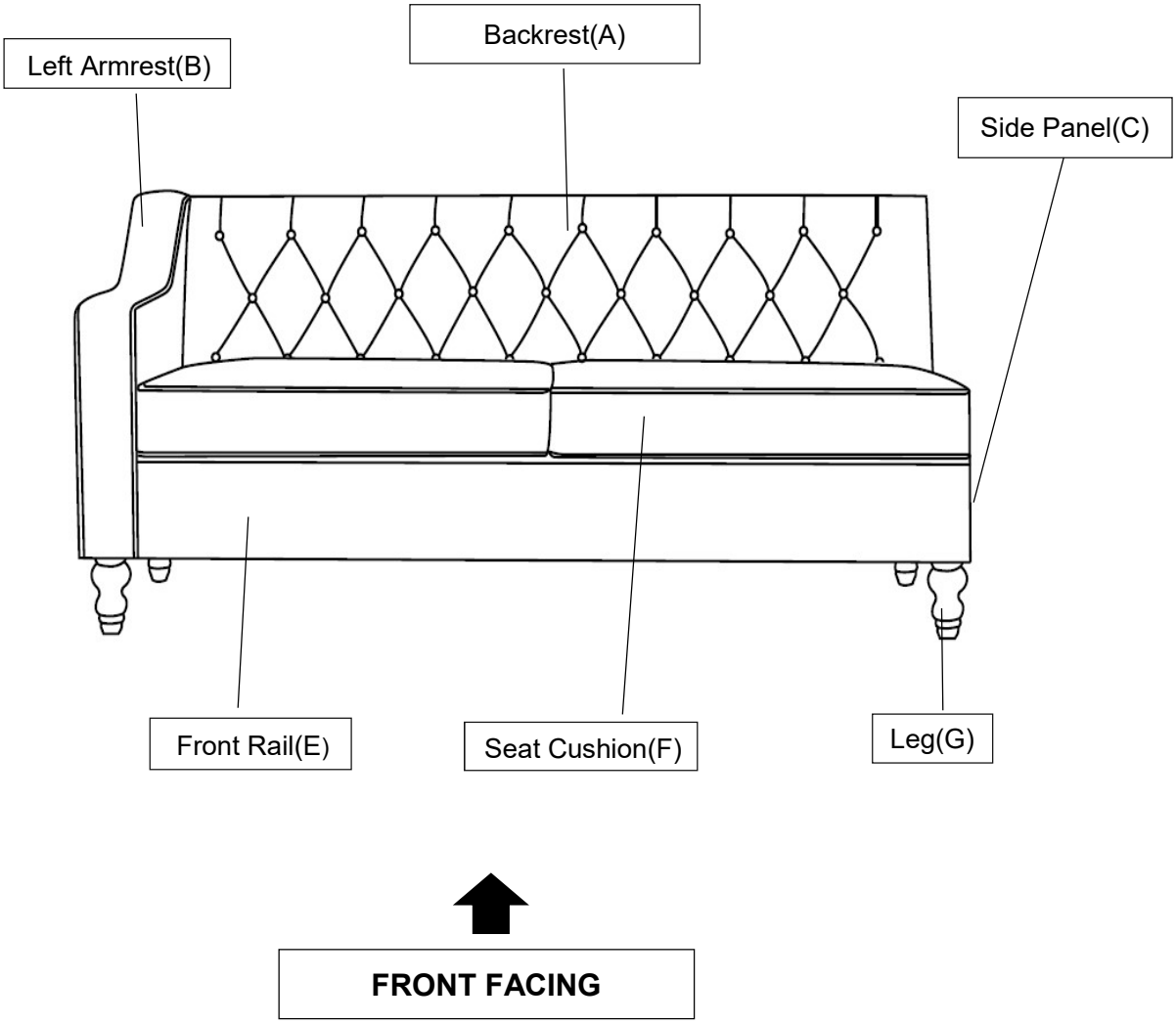

This SOFA has multiple parts and may require up to 60 minutes to assemble. To give you an overview of the Sofa parts, the above picture is to help you put the various parts into perspective. Please read through the instructions below to familiarise yourself with the parts and steps before assembly.

Note: It is recommended that you have an adult partner to assist during the entire assembly process.

Step 1

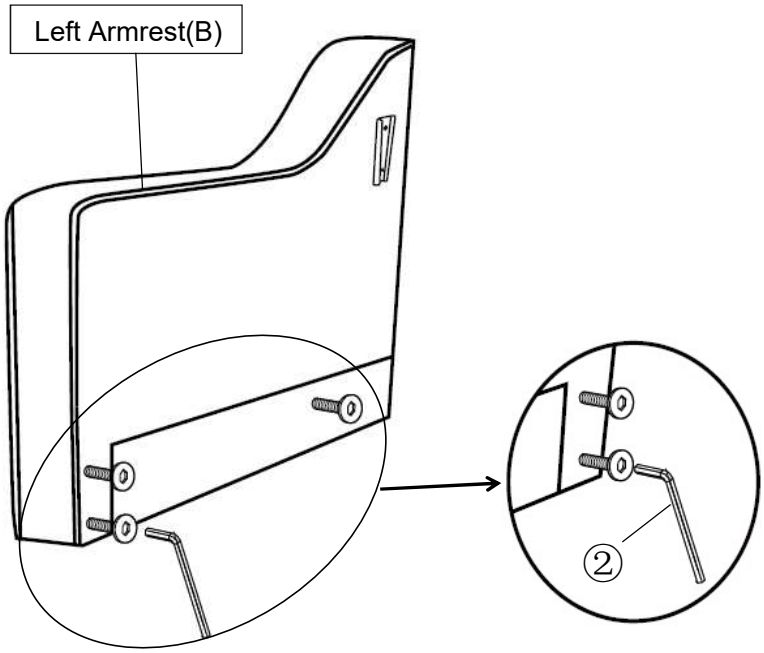

Open the carton and place all the parts on a clean, non-marring surface.
Loosen the 3 bolts in Left Armrest(B) around half inch by Allen Wrench((②).

Step 2

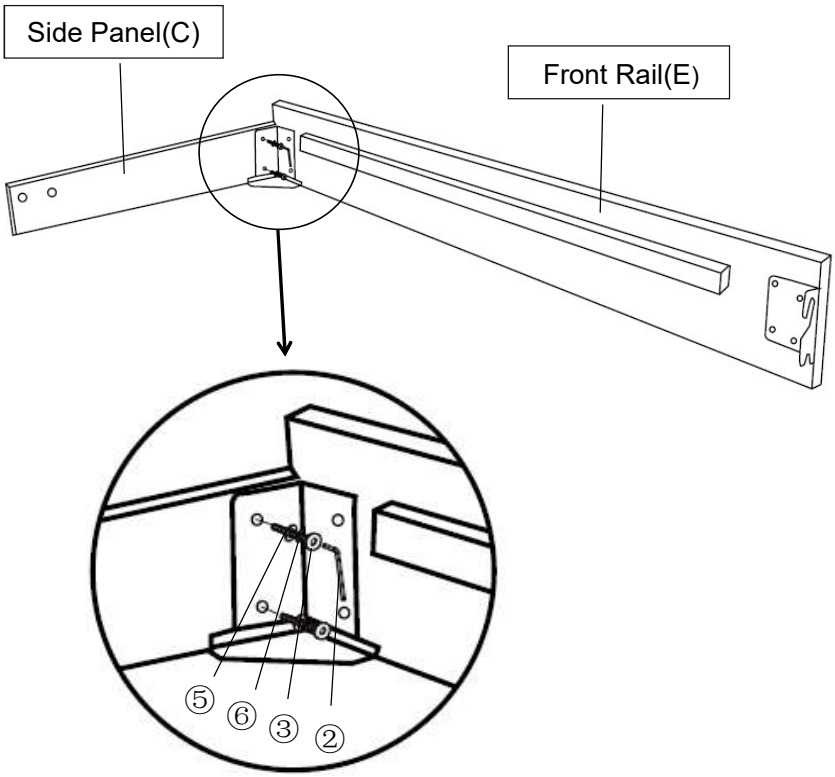

Attach Side Panel(C) to Front Rail(E) using Bolt(③),Spring Washer Ring(⑥),Flat Washer Ring(⑤) with Allen Wrench(②) ,as shown above.
Turning clockwise until tight.

Step 3

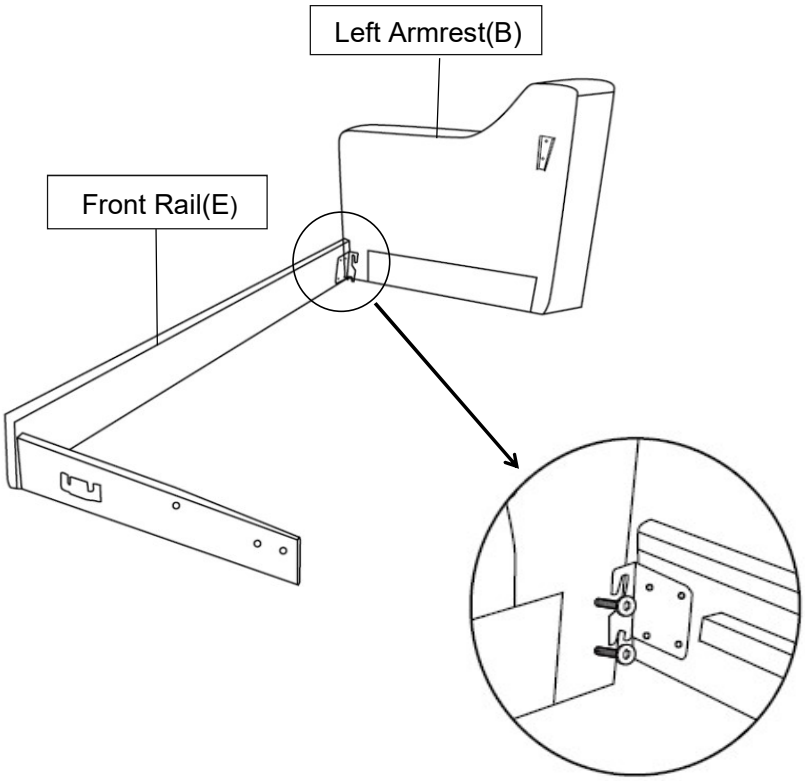

With the assistance of your partner,slide the hook in the eng of Front Rail(E) into the bolts on the Left Armrest(B) as shown above.

Step 4

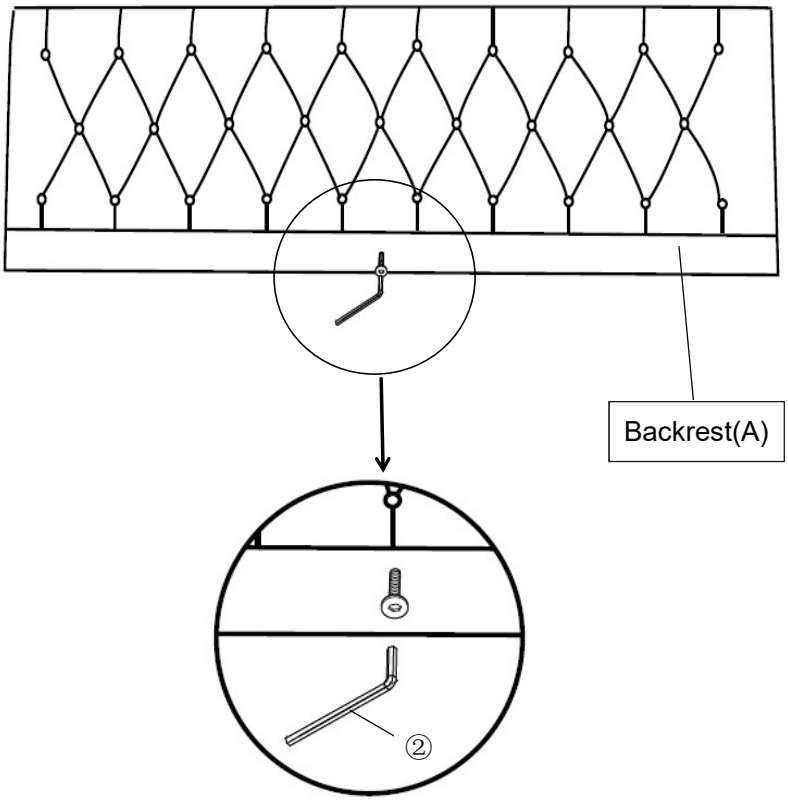

Loosen the 1 bolt in Backrest(A) around half inch by Allen Wrench(②).

Step 5

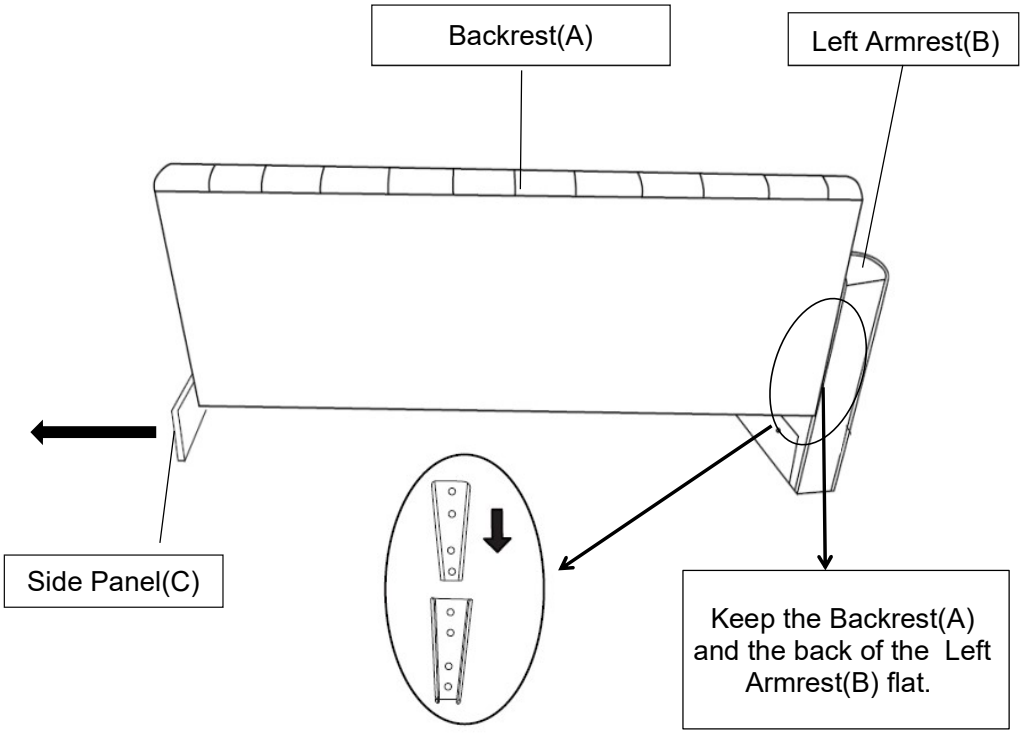

Slide the Tapered Connectors on the Backrest(A) into the Tapered Connectors on the Left Armrest(B) as shown in the picture.
Note: Make sure the Tapered Connectors on Backrest(A) lock into the Tapered Connectors on the Left Armrest(B).
NOTE:Keep the Backrest(A) and the back of the Left Armrest(B) flat.
Assistance from an adult partner is necessary for this assembly process.
During this assembly process - do exercise caution. You may need to use your hand to press down and or pave away the padded surface to facilitate the 'slip and slide' assembly.
Caution: Ensure that your fingers do not get caught or pinched in the assembly process.

Step 6

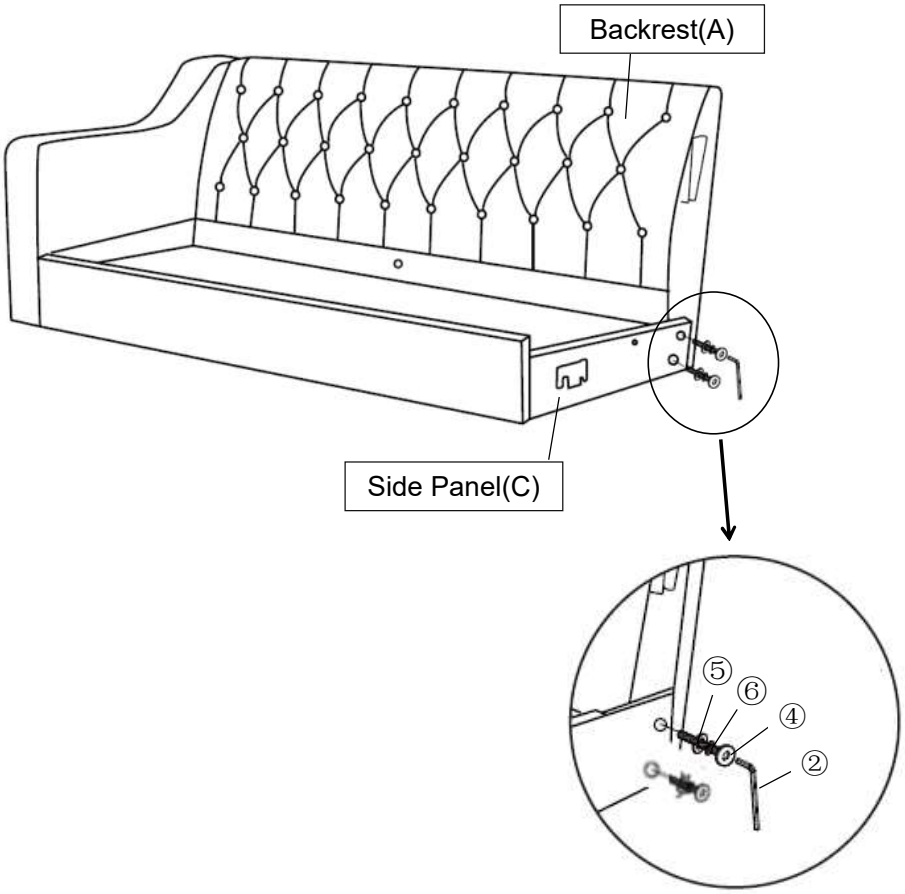

Turn the sofa rightside up.
Attach the Side Panel(C) to the Backrest(A) using Bolt(④),Spring Washer Ring(⑥),Flat Washer Ring(⑤) with Allen Wrench(②) turning clockwise until tight.

Step 7

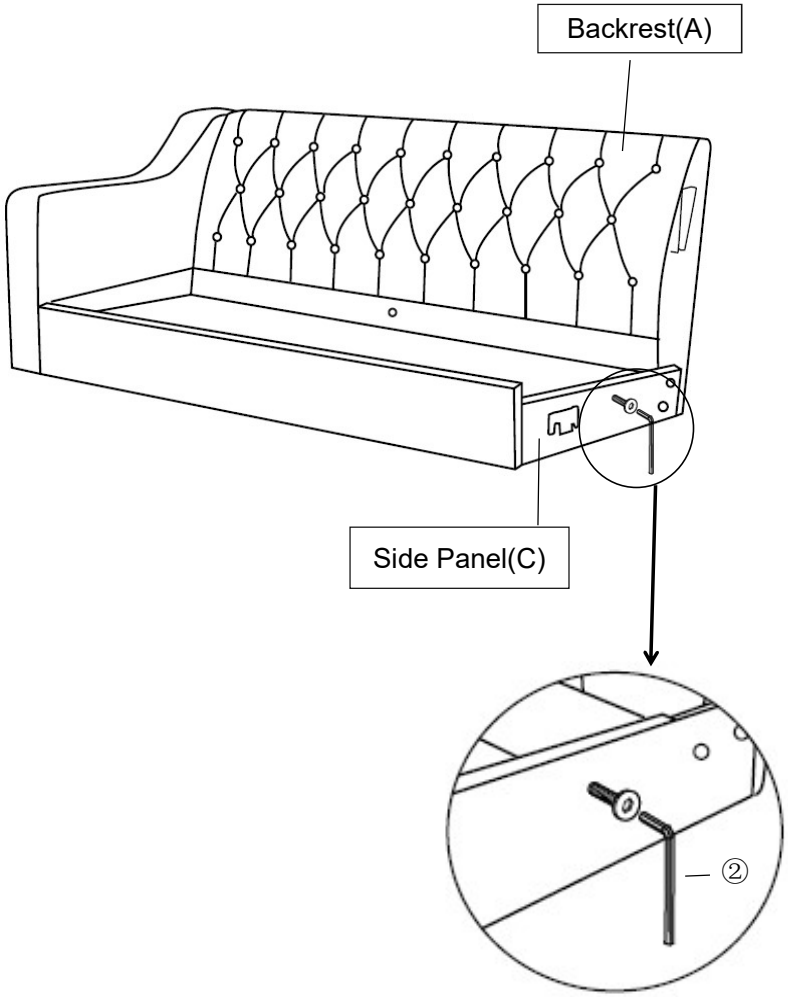

Loosen the bolt in Side Panel(C) around half inch by Allen Wrench((②) as shown.

Step 8

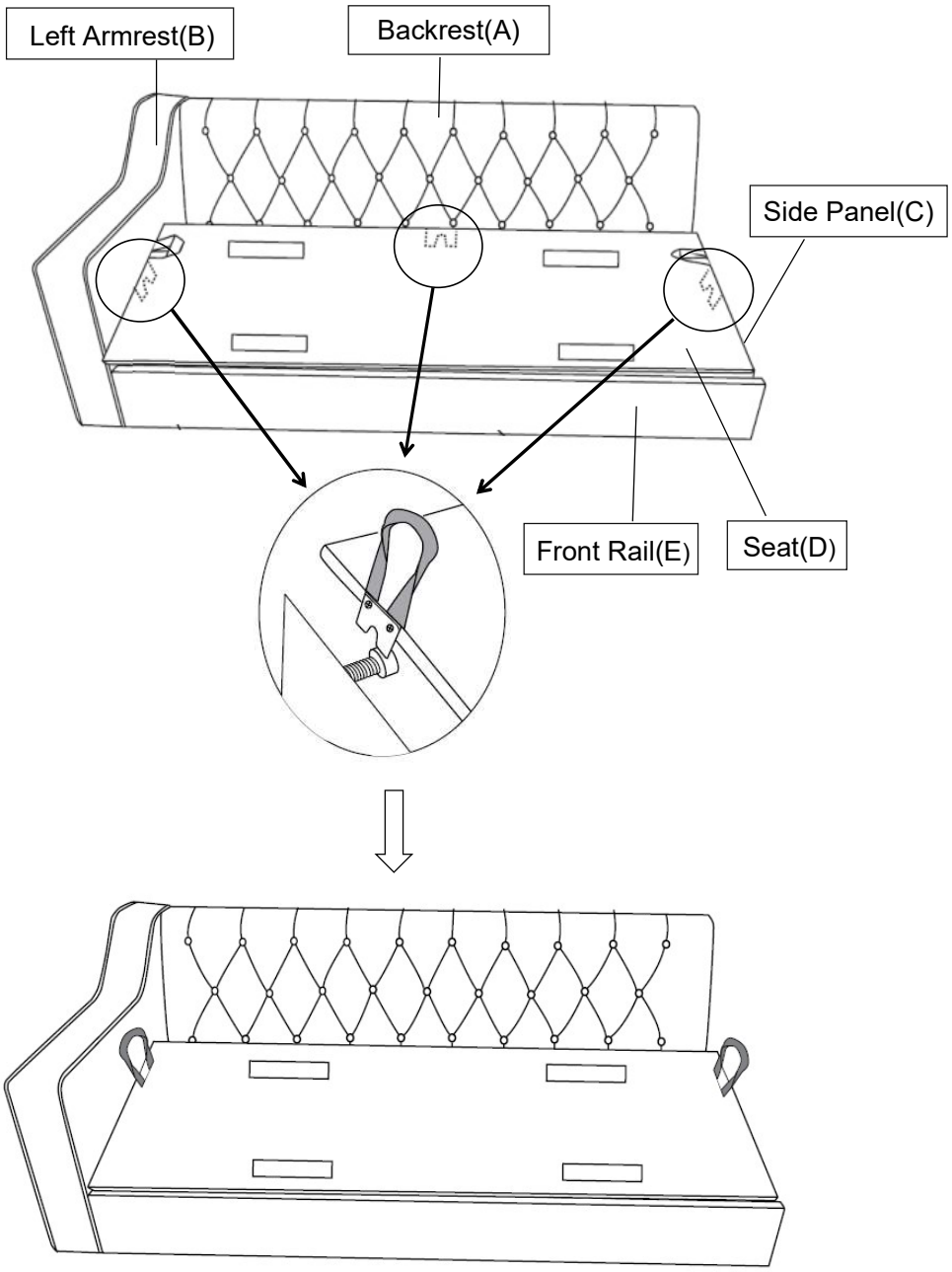

With the assistance of your partner,lift the rope on the two sides of Seat(D) by hand.
Put the Seat(D) on the wood bar of the Front Rail(E) and then slowly place it down on the bolt of Backrest(A),Left Armrest(B) and Side Panel(C) as shown above.
Note:All the u-shaped iron sheet need clamped to the bolt.

Step 9

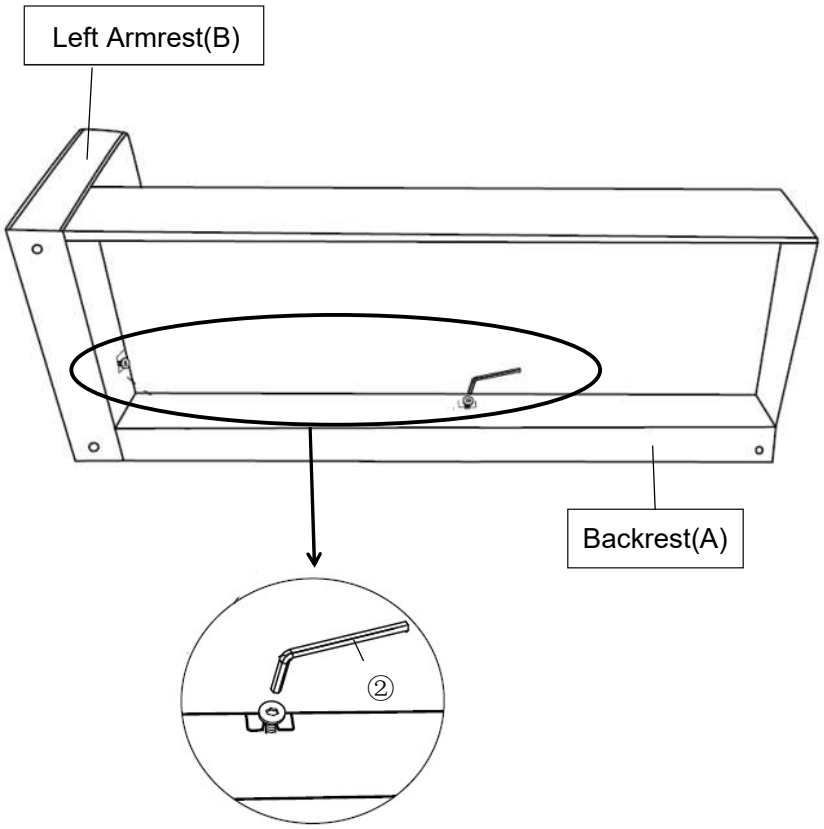

Tilt and lay the Sofa on a flat surface.
Tighten the Bolts in the bottom of Backrest(A) and Left Armrest(B) by Allen Wrench(②) as shown above.
Tighten the Bolts fully in a sequential manner.

Step 10

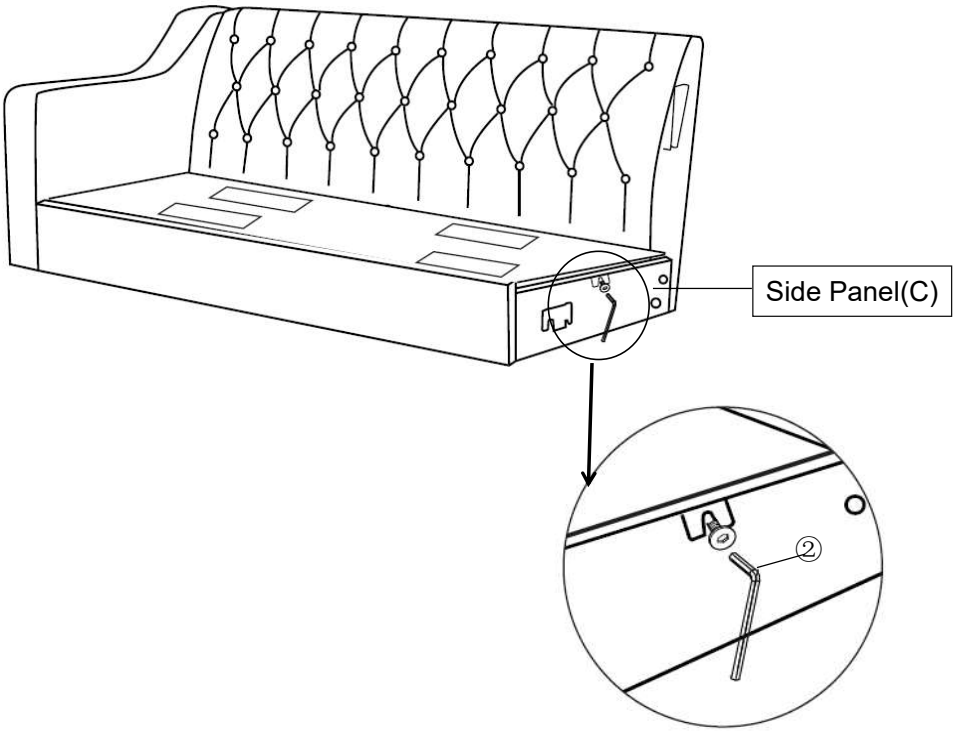

Tighten the Bolt in the Side Panel(C) by Allen Wrench(②) as shown above.
Tighten the Bolt fully in a sequential manner.

Step 11

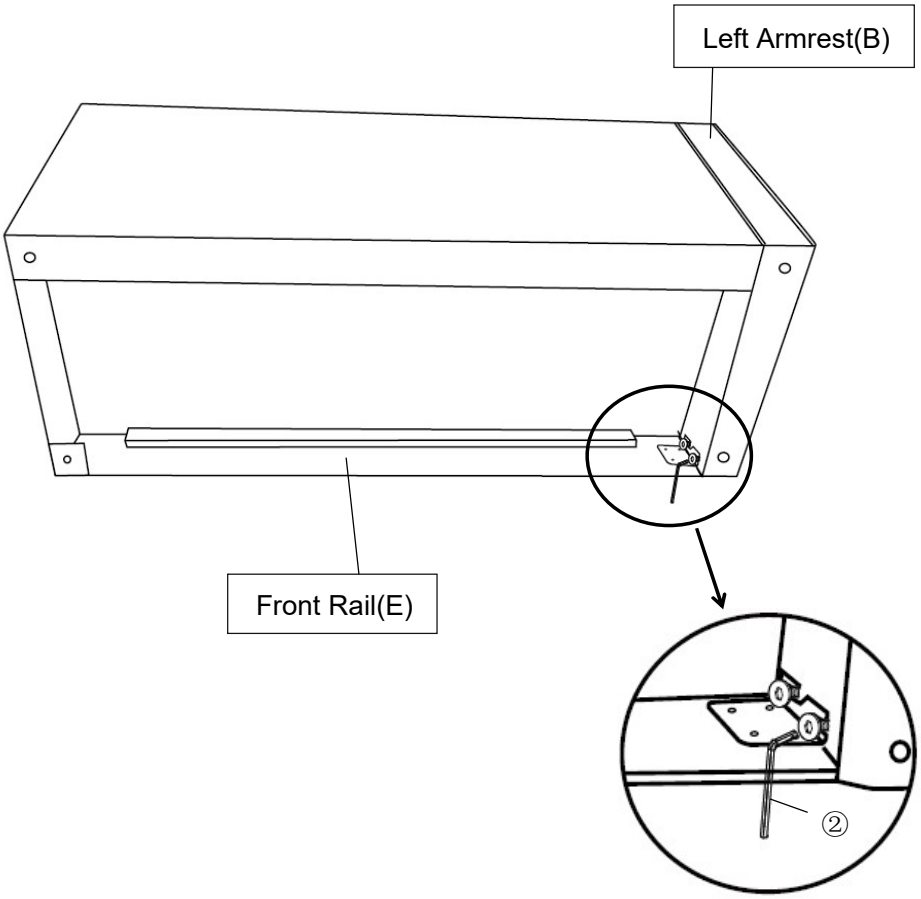

Change tilt and lay the Sofa another side on a flat surface.
Tighten all the Bolts at the end of the bottom Left Armrest(B) by Allen Wrench(②) as pictured above.
Tighten the Bolts fully in a sequential manner.

Step 12

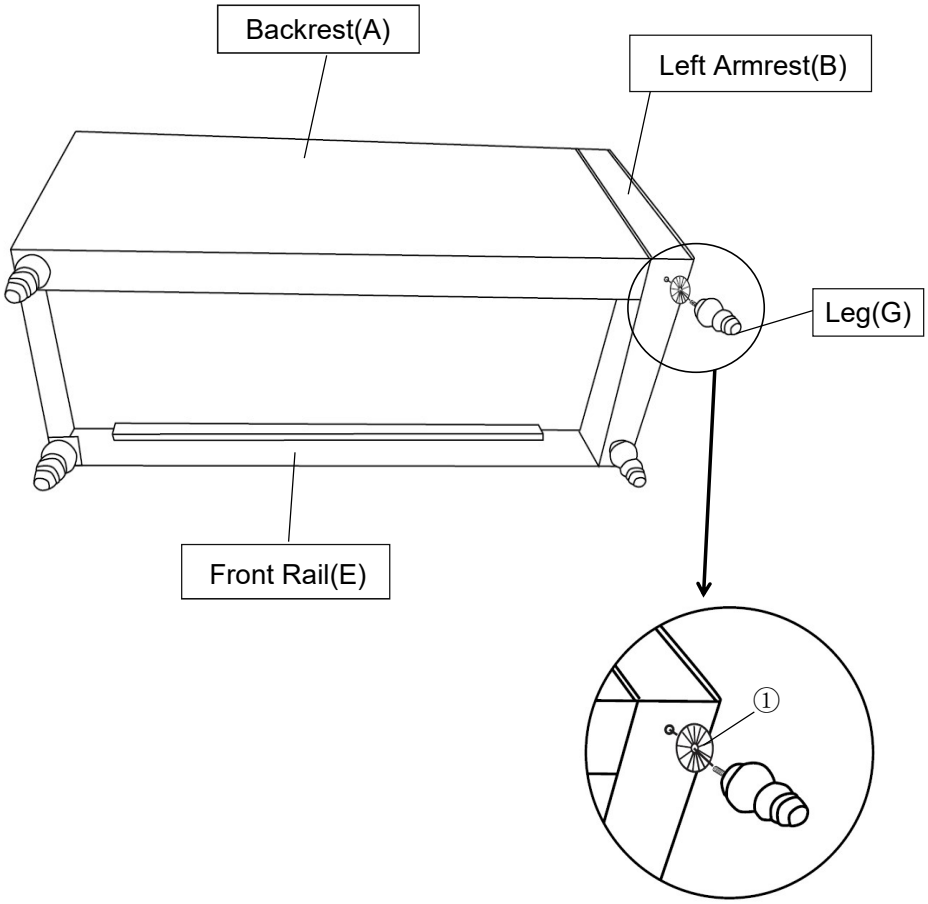

Install the Leg(G) into the bottom of Left Armrest (B) ,Backrest(A) and Front Rail(E) by placing Plastic Washer(①) onto the threaded stem.
Turning the Leg(G) clockwise until tight.
Note: The use of Plastic Washer(①) are OPTIONAL and are especially useful to help alleviate slight wobbles. Some Legs may need more than one whilst some legs may not need any.

Step 13

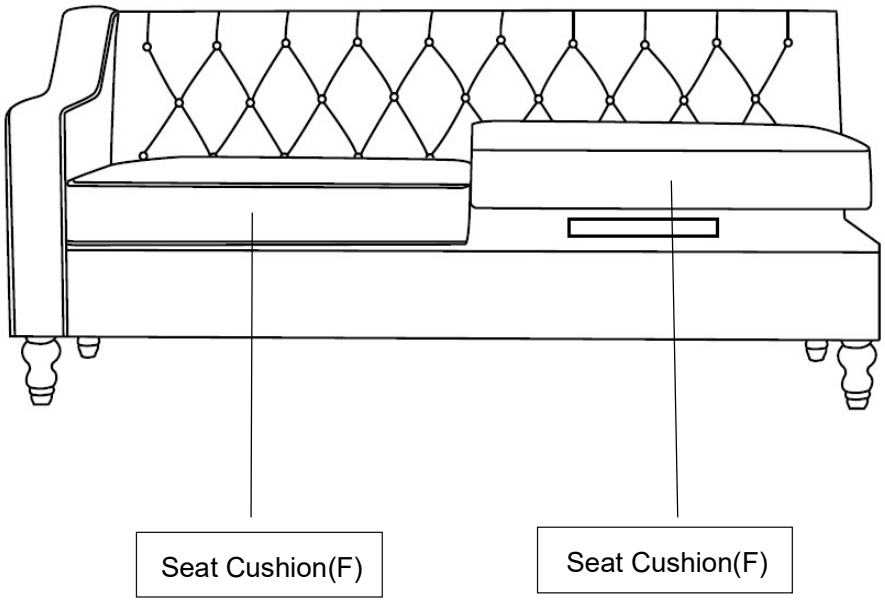

Turn the sofa rightside up.
Place the Seat Cushions(F) on the Sofa.

Step 14

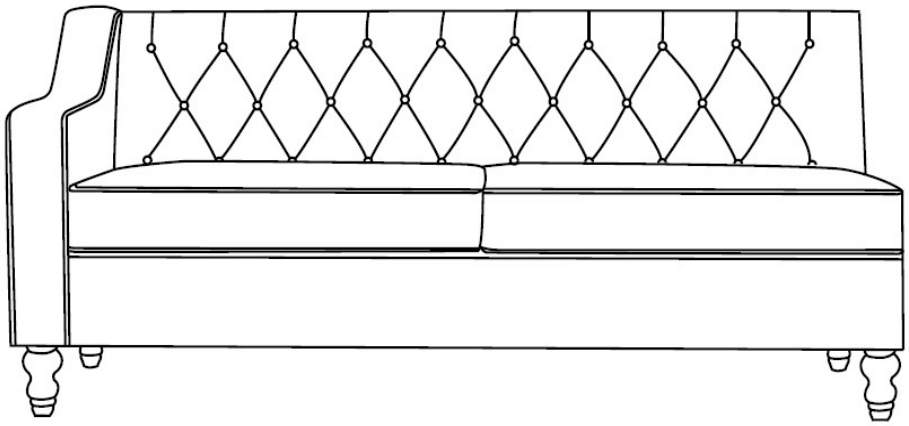

Your Left Arm Sofa is ready for use.
This Sofa can only be used on a flat, level surface.

Your LEFT ARM SOFA can be used connecting with CHAISE by prefixed Connecting Piece as picture showned.	
Step 15	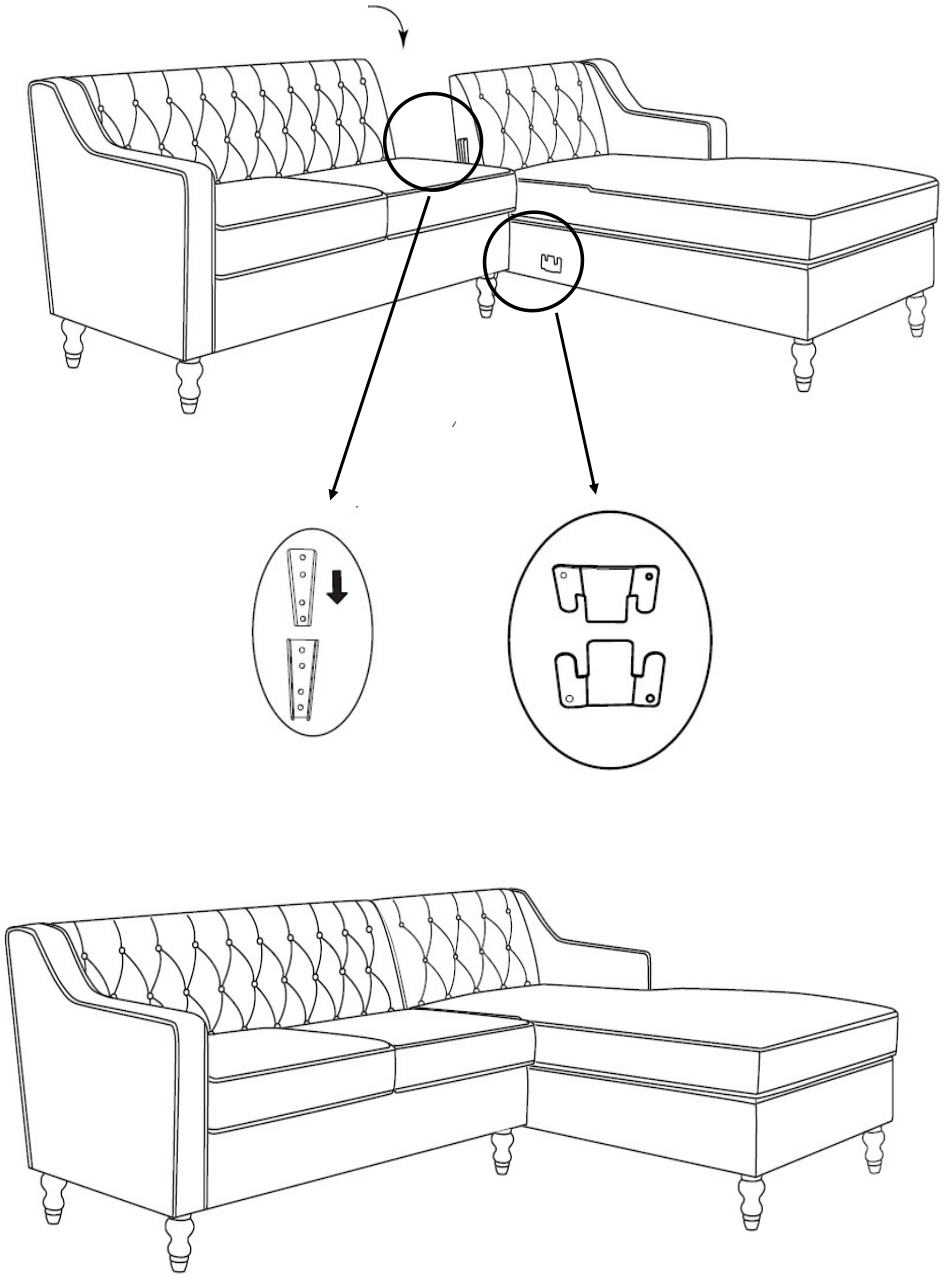

Care & Maintenance

- Furniture may scratch floors. We recommend using furniture pads to protect your floors.
- Do not put hot items directly on furniture surface.
- Do not clean furniture with harsh cleansers or polish.
- Do not place furniture under direct sunlight.
- Do not place furniture near heating or cooling vents.
- Do not write on furniture without a padded barrier to protect the surface.
- Do not place furniture outside . For indoor use only.
- Not for commercial use. For residential use only.
- Stains may be removed with mild soap solution and damp cloth.
- Children should not climb or jump on the furniture.

- Dust and pick-up spills using a clean, non-colored, lint-free cloth.