INSTALLATION
Product Manual

Version: 210141-03-24A-LJ

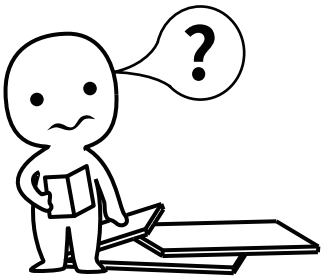

IMPORTANT INFORMATION!

please read the entire manual before starting to assemble and/or using this product.follow the manual thoroughly and keep it for further reference.

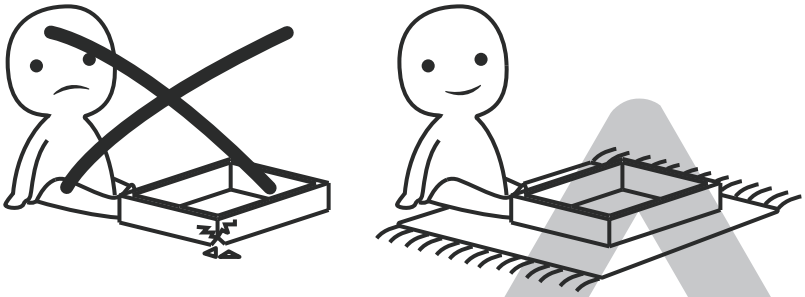

AVOID SCRATCHES!

In order to avoid scratching this furnuture should be assembled on a soft layer-could be a rug.

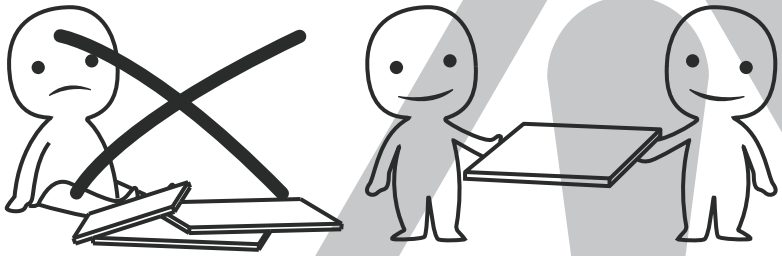

IMPROVE EFFICIENCY !

Try to find a partner to install with you, which can speed up the installation efficiency and shorten the time.

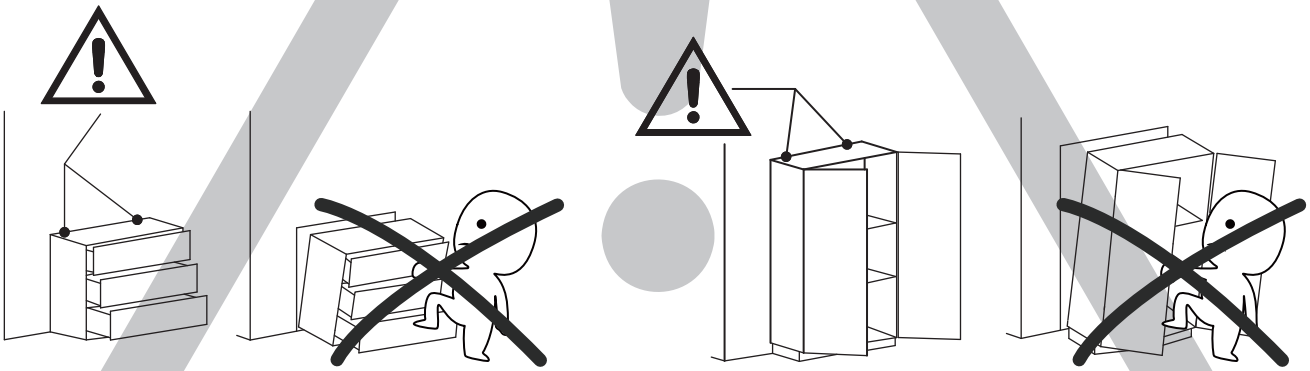

ANTI-TOPPLE WARNING !

Overturned furniture can cause serious or fatal crush injuries. To prevent tipping over, be sure to use the wall attachment, if not included with this product. Please purchase the wall attachment that fit your wall. If unsure, seek professional advice. Please read and follow each step of the instructions carefully.

IMPORTANT !

It is important that any product which is assembled using any kind of screw is re-tightened 2 weeks after assembly,and once every 3 months - in order to assure stability through-out the lifespan of the product.

For regular maintenance and cleaning of the product, for the frame, please use a rag dipped in neutral detergent to fully wipe it, and then dry it with a clean rag.For glass materials, wipe with a rag dampened with water glass cleaner, and then dry with a dry rag.

Do not use an electric screwdriver, and do not use too much force when installing, because the board is easy to break.

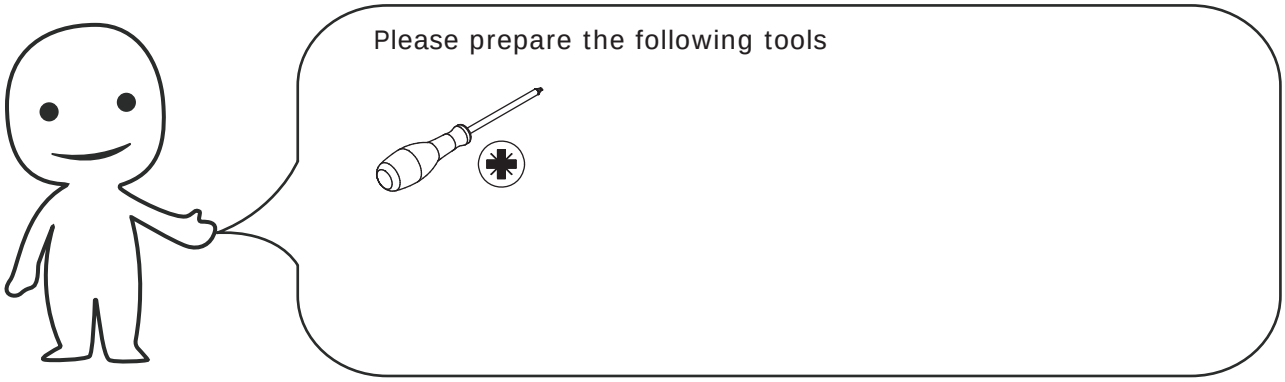

When installing, please carefully confirm whether each screw corresponds to the manual, accessories with similar shapes can be distinguished by size

A x 64	B x 64	C x 42	D x 5
CRB1295A	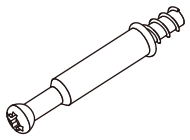 CRA0635A	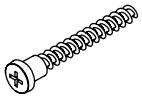 CRC0540A	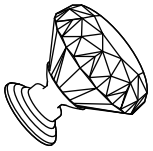

E x 5	F x 67	G x 4	K x 2
CRE0416A	CRD0312A	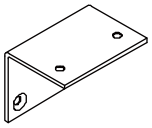	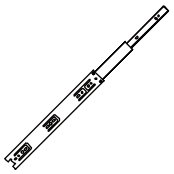 18”

L x 5	Power plug x 1
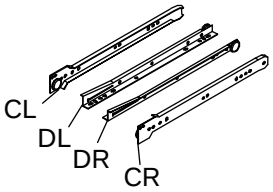 WX0814A	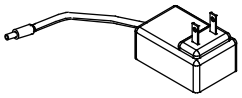

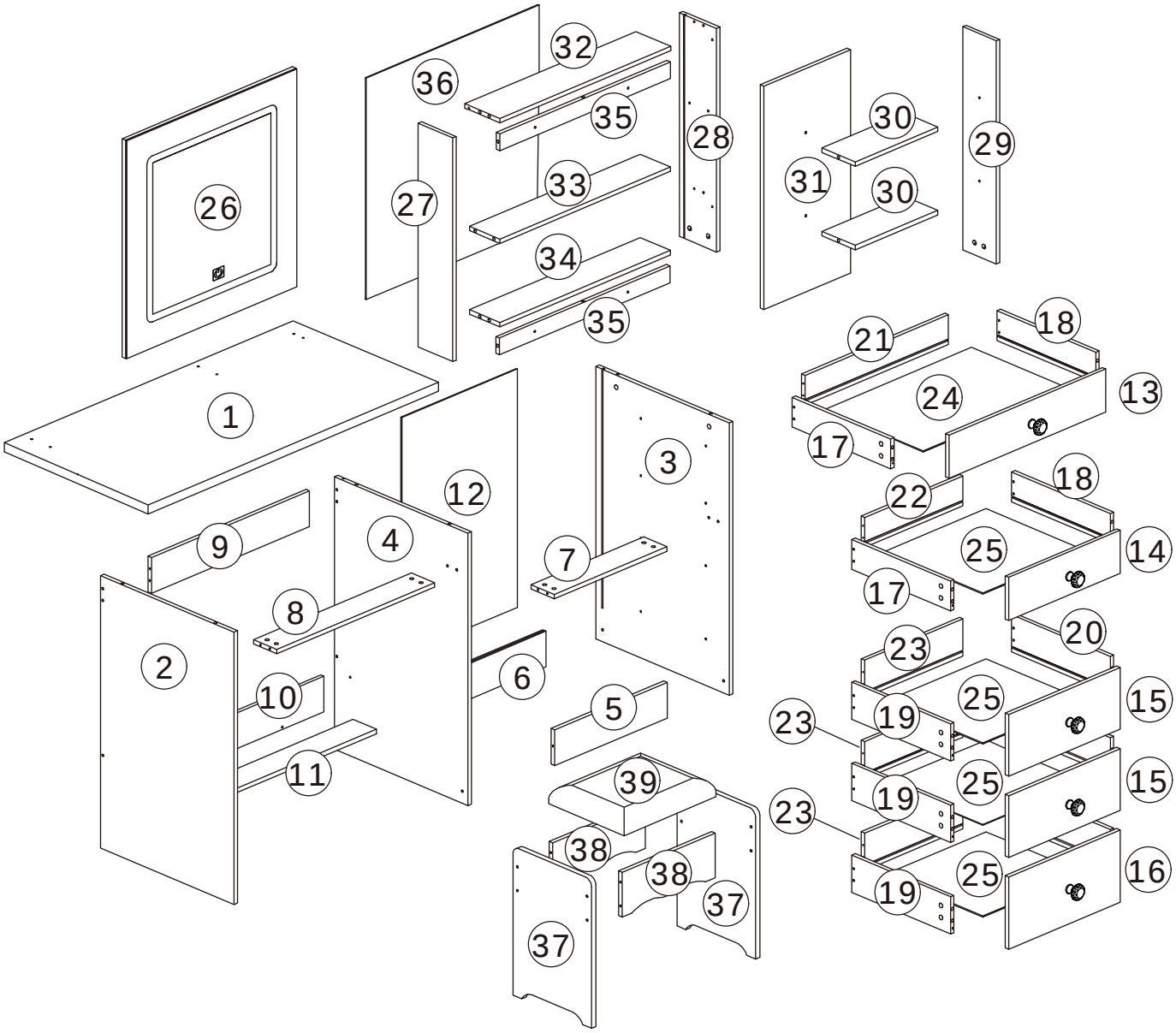

⚠WARNING

Children have died from furniture tipover.To reduce the risk of furniture tipover:

- ALWAYS install tipover restraint provided.
- NEVER put a TV on this product.
- NEVER allow children to stand,climb or hang on drawers,doors,or shelves.
- NEVER open more than one drawer at a time.
- Place heaviest items in the lowest drawers.

This is a permanent label.
Do not remove!

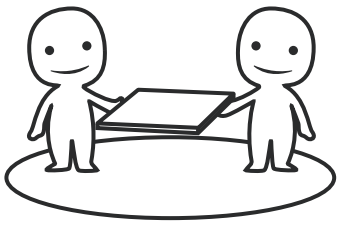

ASSEMBLED BY 2 ADULTS

1

B x 4

CRA0635A

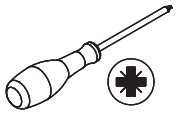

Insert quickfit screw(B) into corresponding holes in board 13 with a screwdriver as shown.

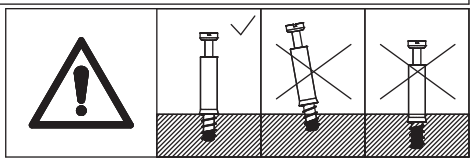

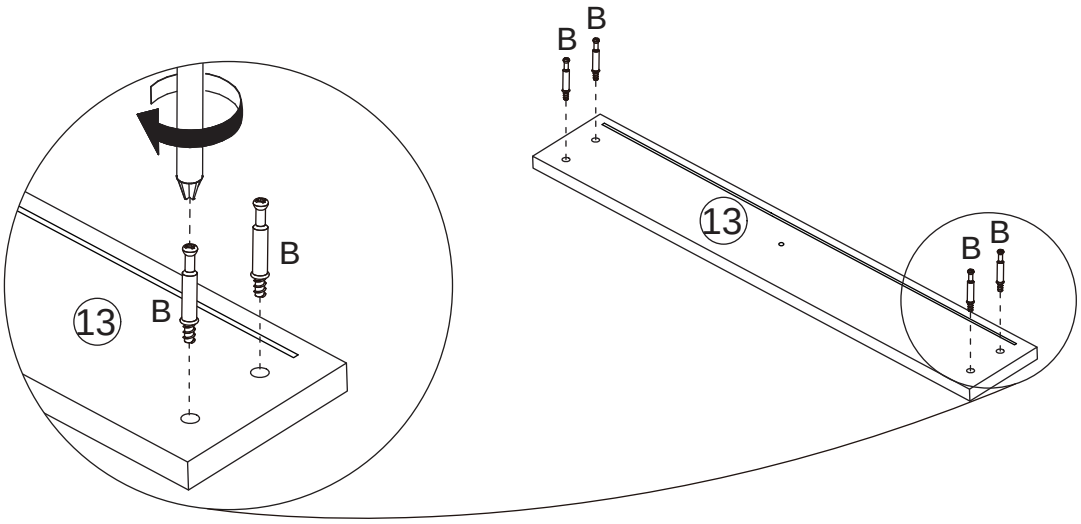

2

A x 4

CRB1295A

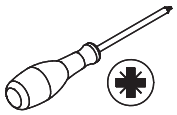

Attach board 13 to board 17,18 and turn cam locks(A) clockwise to tighten as shown.

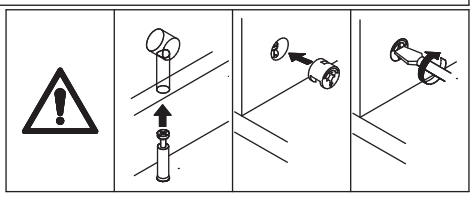

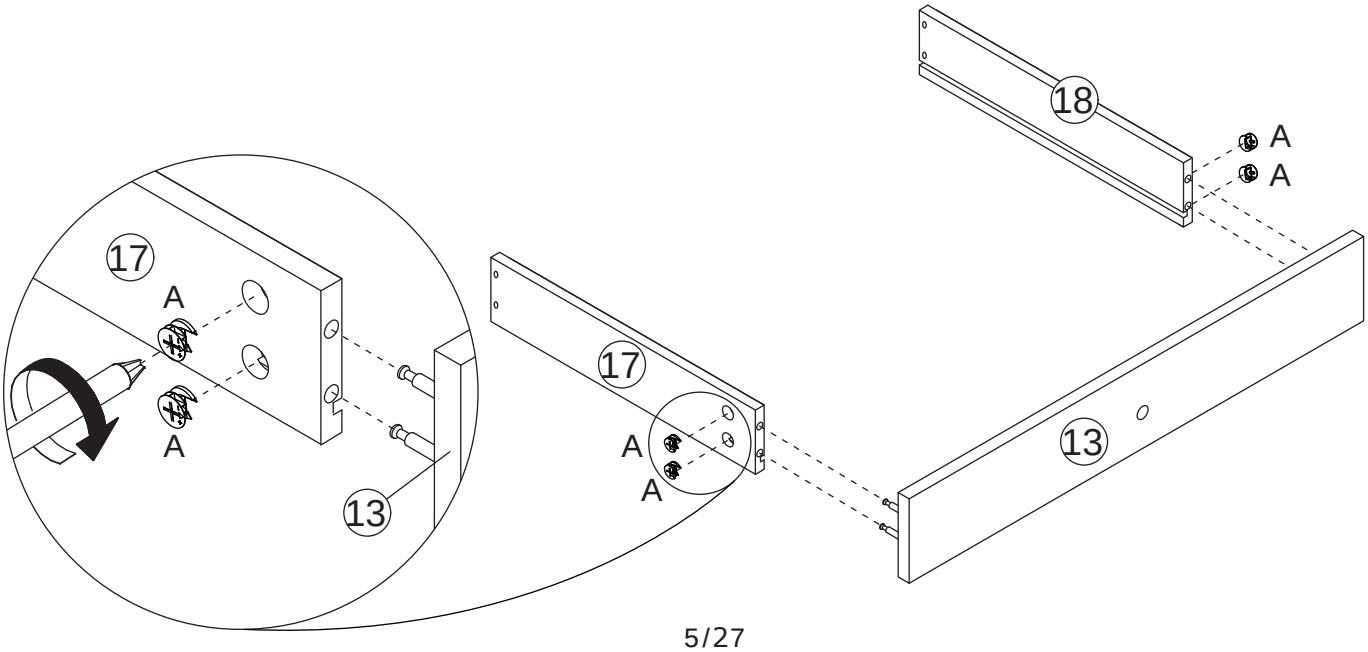

3

Slide board 24 into available slots.

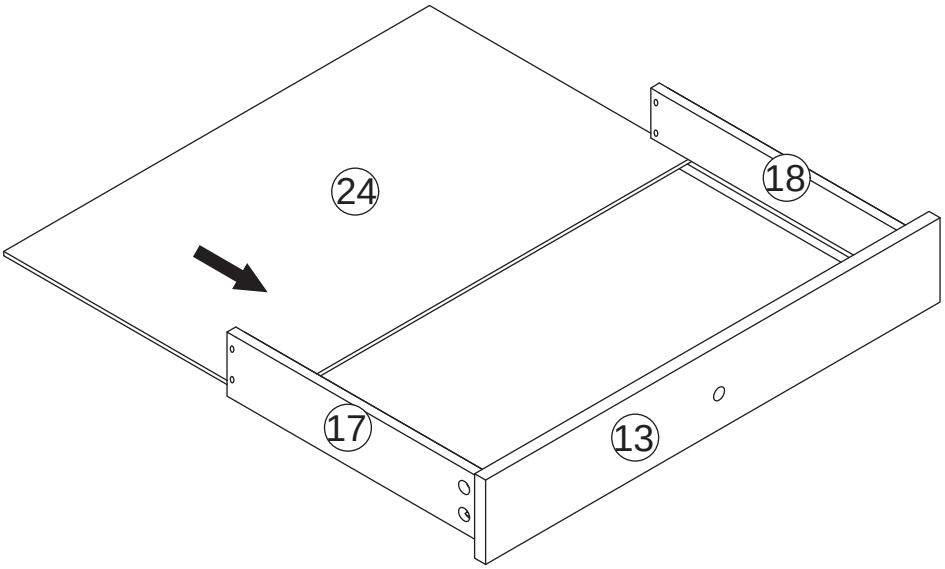

4

C x 4

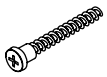

CRC0540A

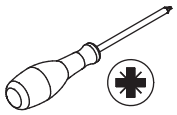

Fix board 17,18 to board 21 with screw(C) as shown.

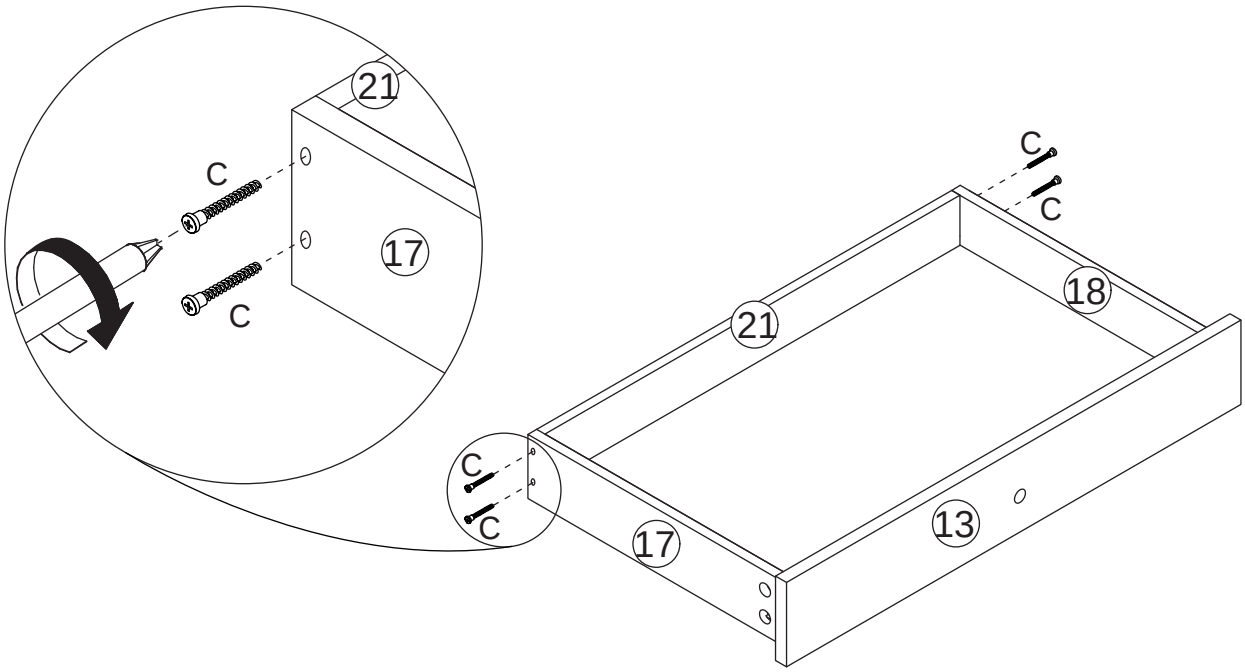

5

B x 4

CRA0635A

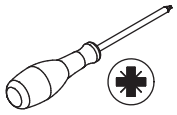

Insert quickfit screw(B) into corresponding holes in board 14 with a screwdriver as shown.

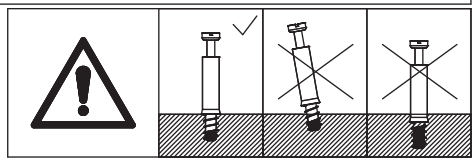

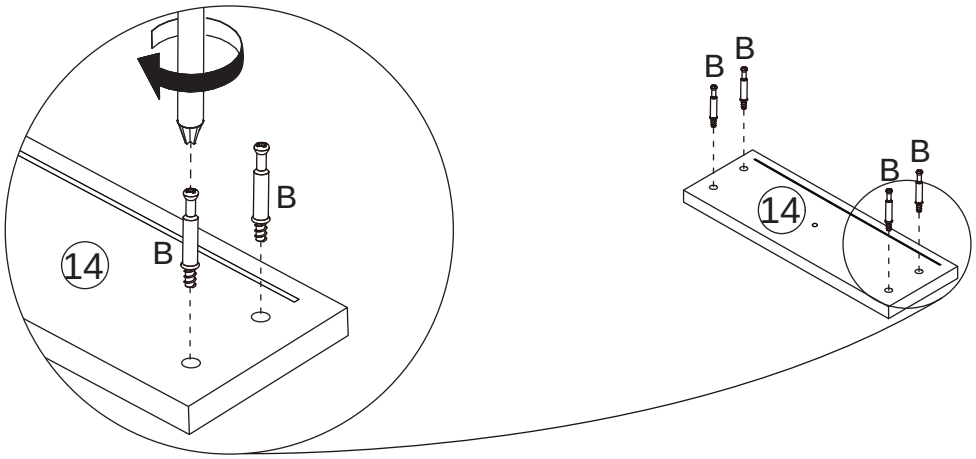

6

A x 4

CRB1295A

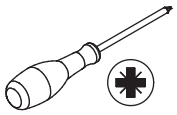

Attach board 14 to board 17,18 and turn cam locks(A) clockwise to tighten as shown.

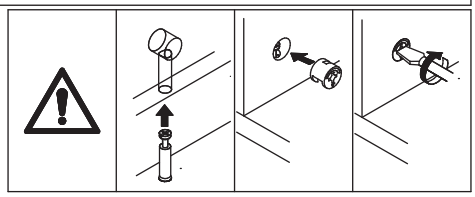

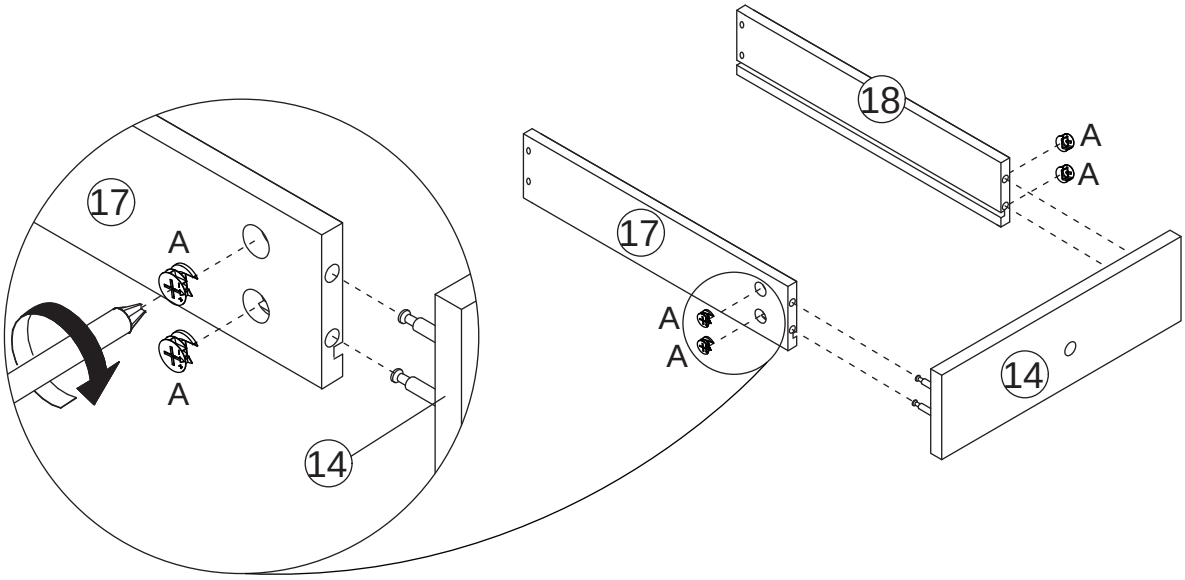

7

Slide board 25 into available slots.

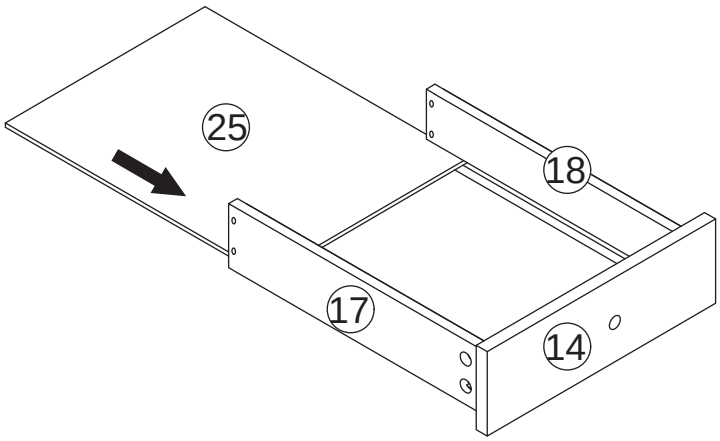

8

C x 4

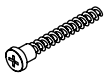

CRC0540A

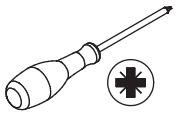

Attach board 17,18 to board 22 with screw(C) as shown.

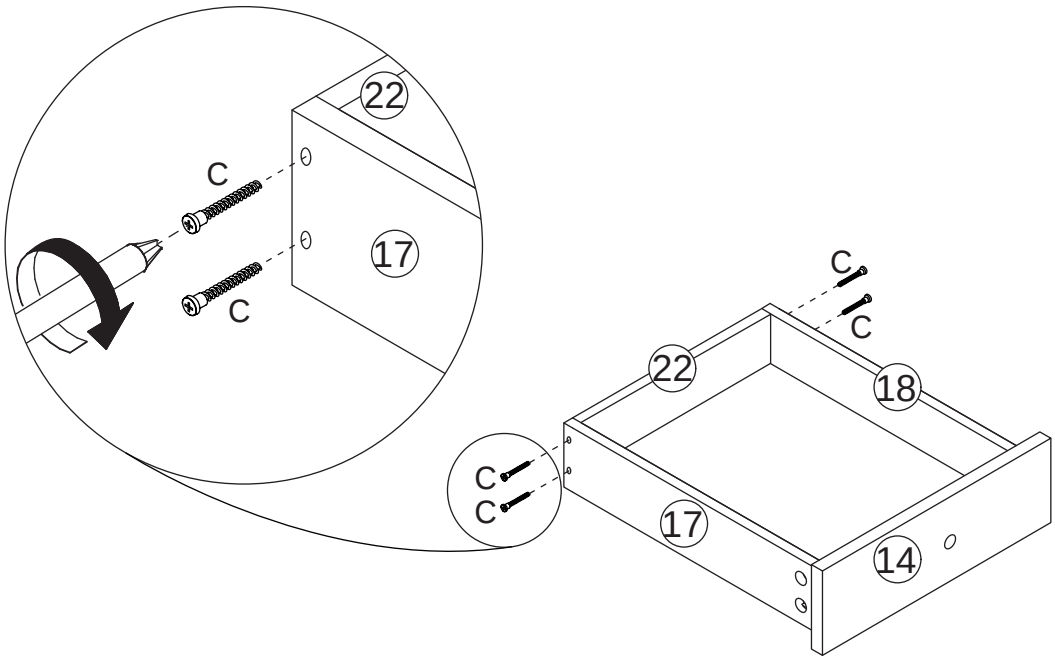

9

B x 8

CRA0635A

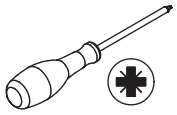

Insert quickfit screw(B) into corresponding holes in board 15 with a screwdriver as shown.

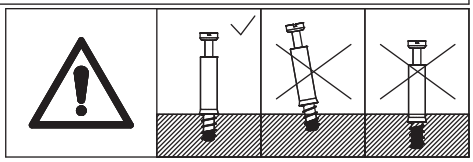

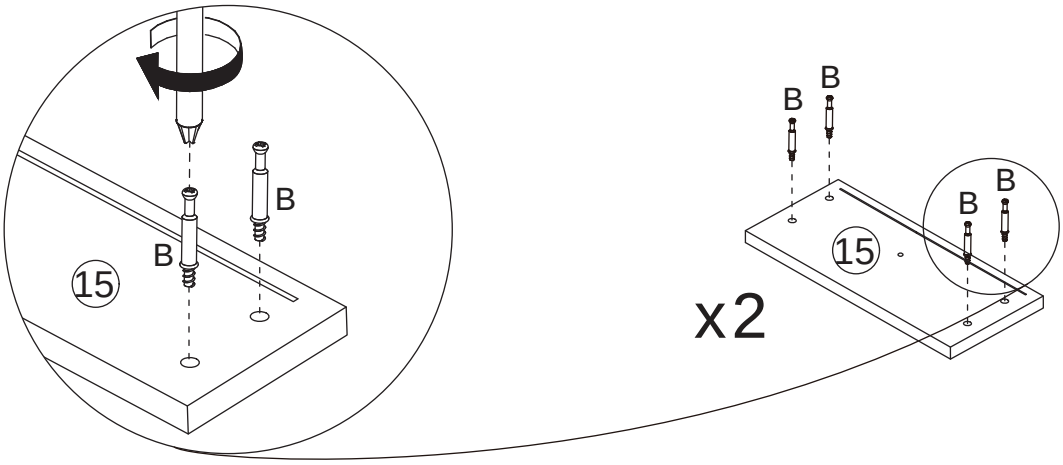

10

A x 8

CRB1295A

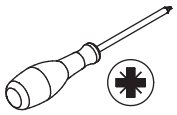

Attach board 15 to board 19,20 and turn cam locks(A) clockwise to tighten as shown.

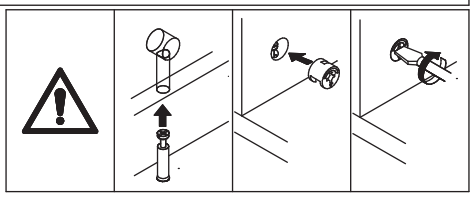

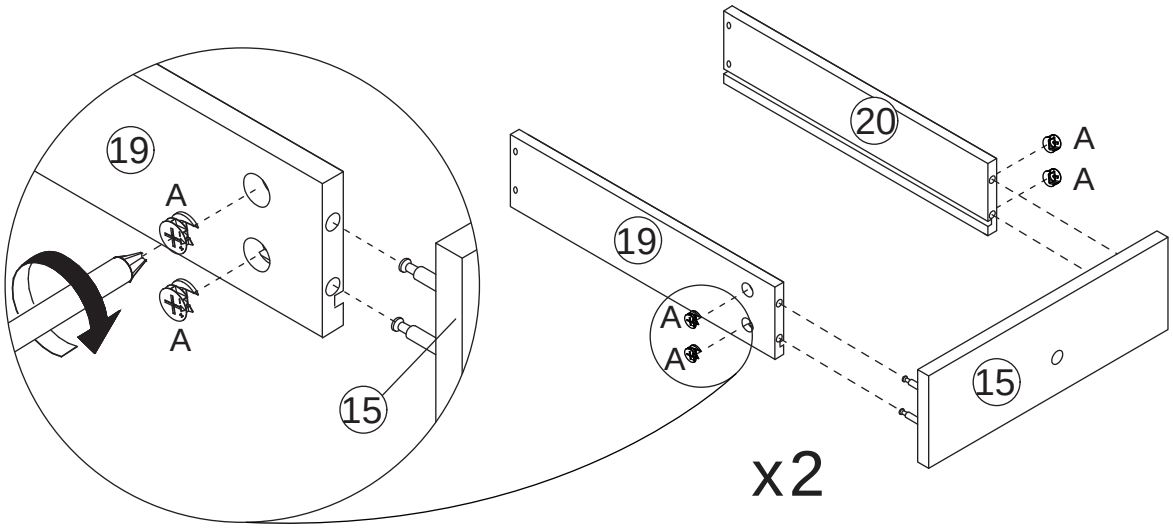

11

Slide board 25 into available slots.

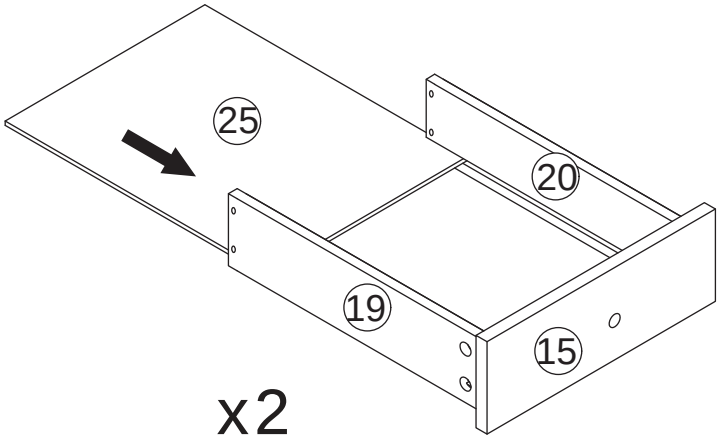

12

C x 8

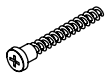

CRC0540A

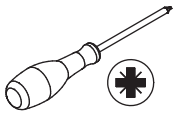

Fix board 19,20 to board 23 with screw(C) as shown.

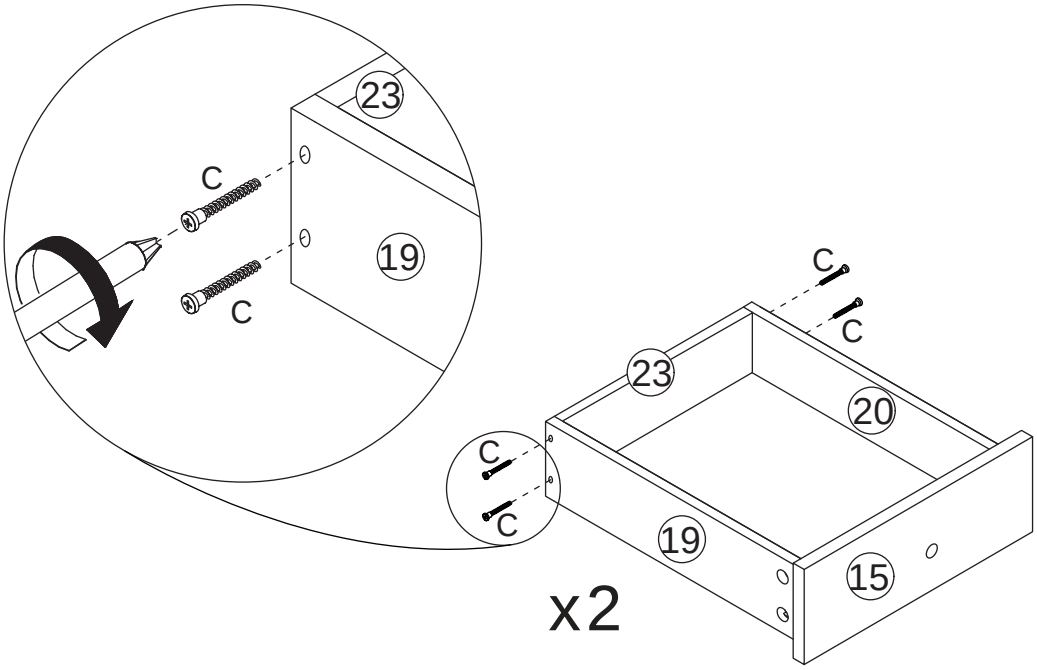

13

B x 4

CRA0635A

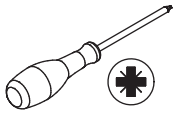

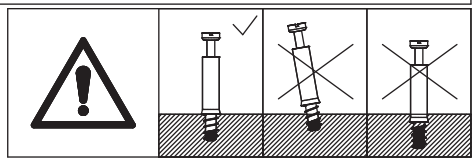

Insert quickfit screw(B) into corresponding holes in board 16 with a screwdriver as shown.

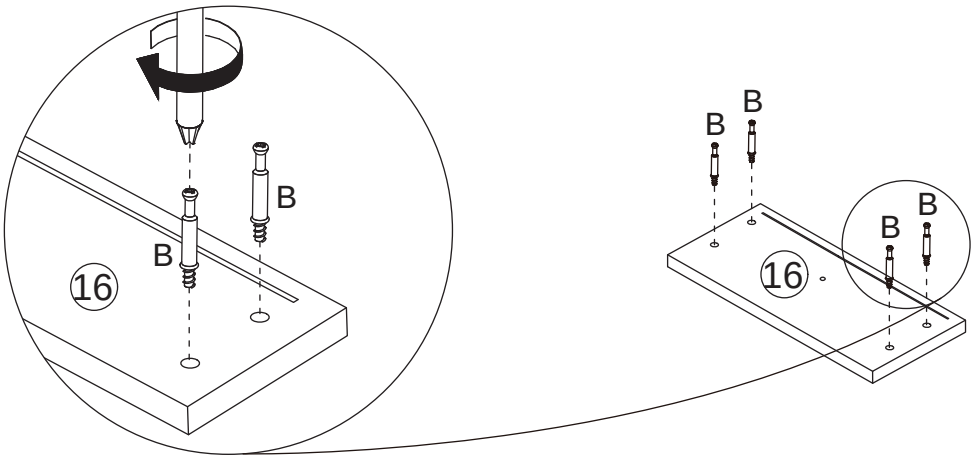

14

A x 4

CRB1295A

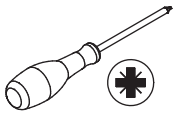

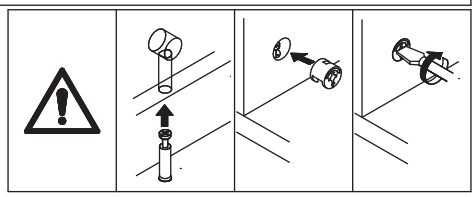

Attach board 16 to board 19,20 and turn cam locks(A) clockwise to tighten as shown.

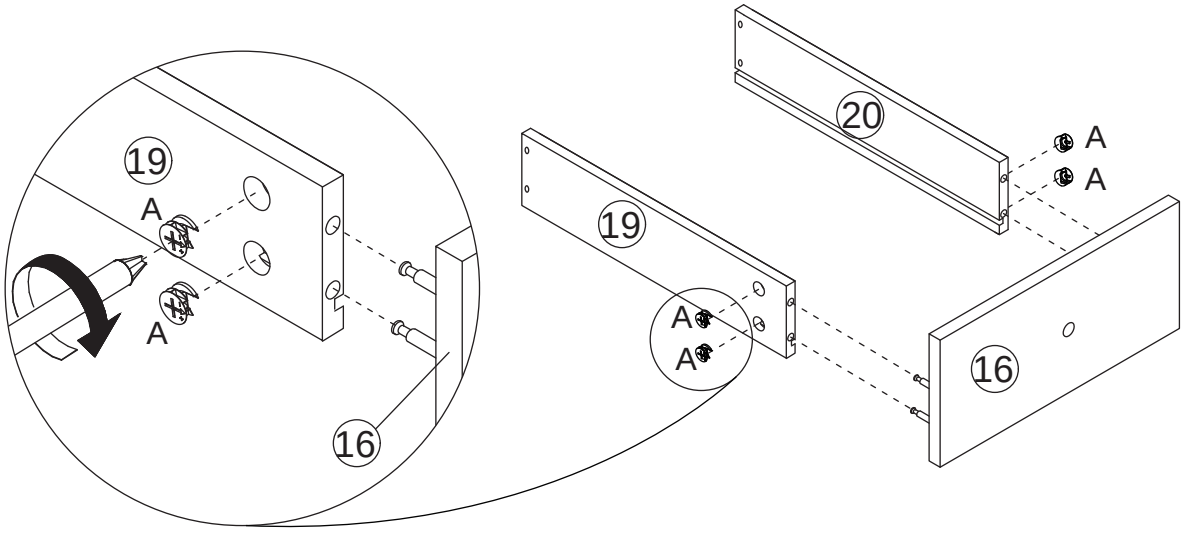

15

Slide board 25 into available slots.

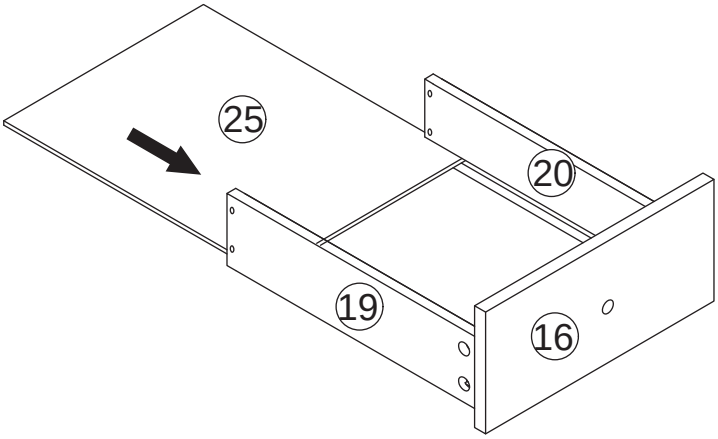

16

C x 4

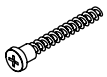

CRC0540A

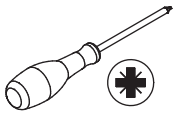

Fix board 19,20 to board 23 with screw(C) as shown.

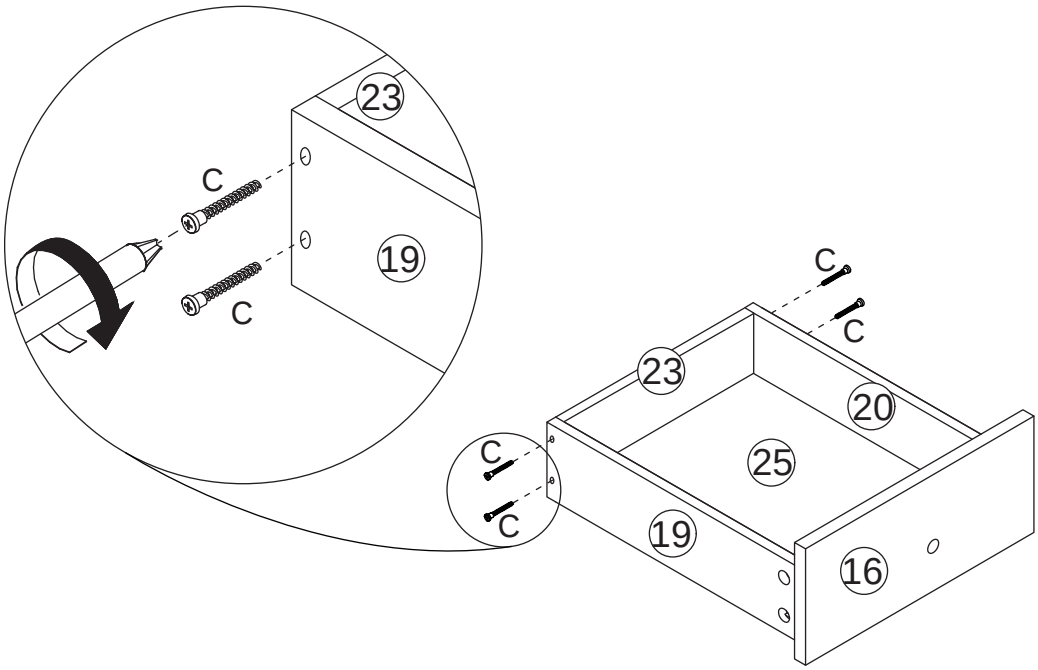

17

D x 5	E x 5	F x 20	L x 5	
	CRE0416A	CRD0312A	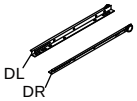 WX0814A	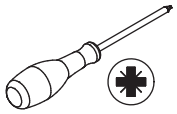

Fix runner(L) to each side of the drawer with screw(F) as shown. Pay attention to the runner's installation direction(DL is on the drawer's left, DR is on the drawer's right, as is shown.).
Fix knob(D) with screw(E) as shown.

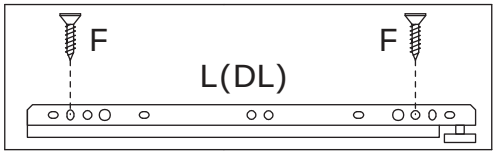

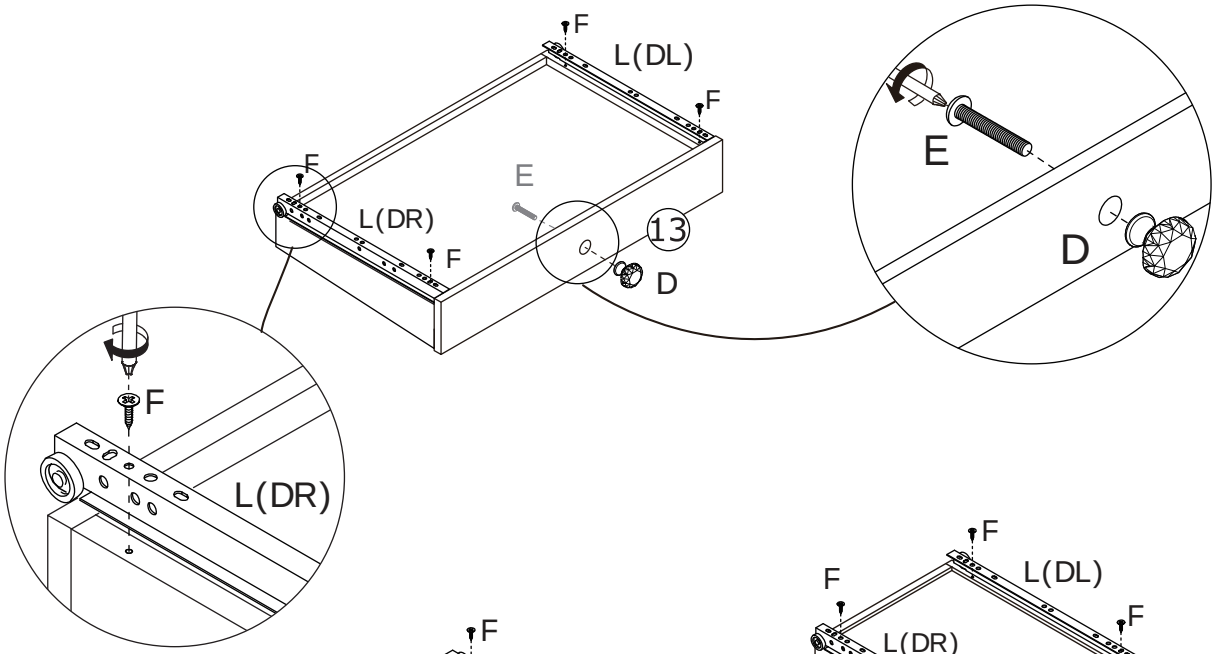

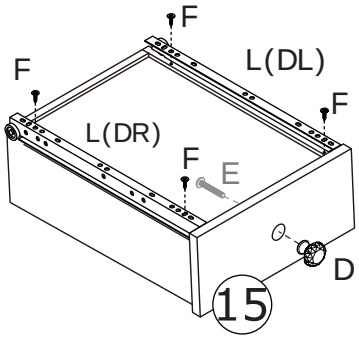

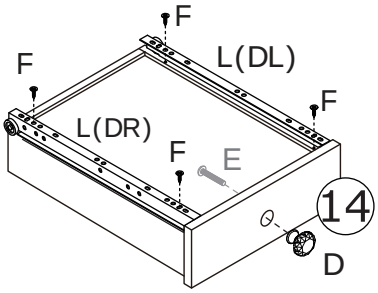

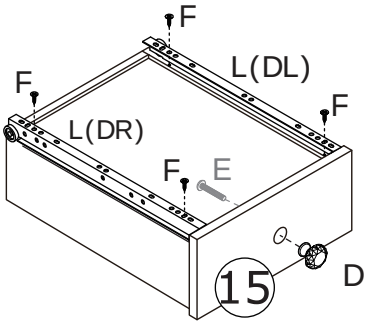

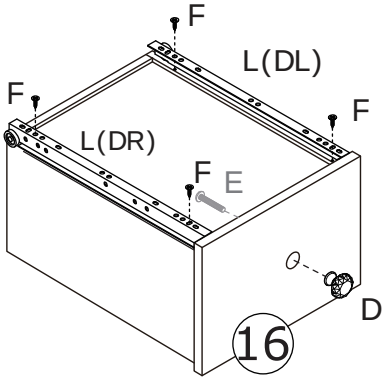

18

F x 20	L x 5	
CRD0312A	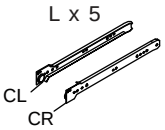 WX0814A	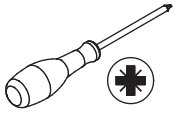

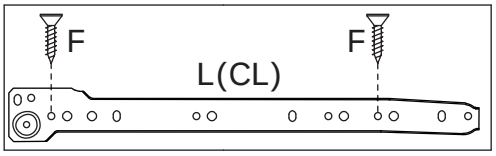

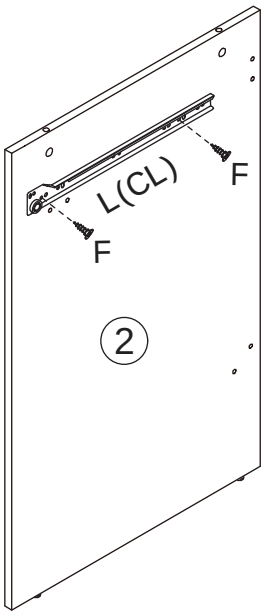

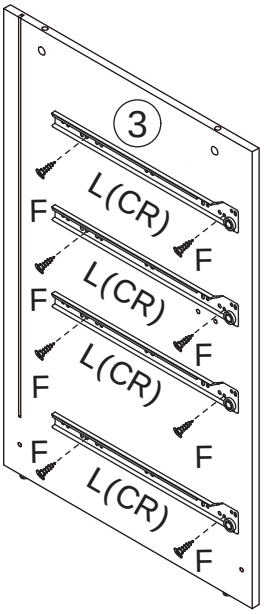

Fix slide rail(L) to board 2,3,4 with screw(F) as shown.

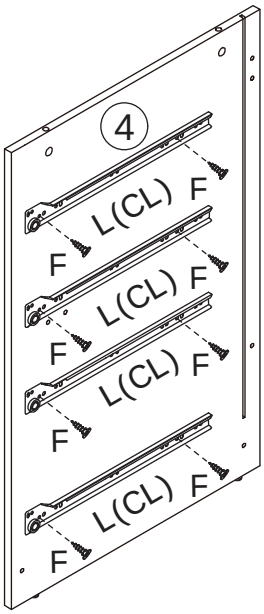

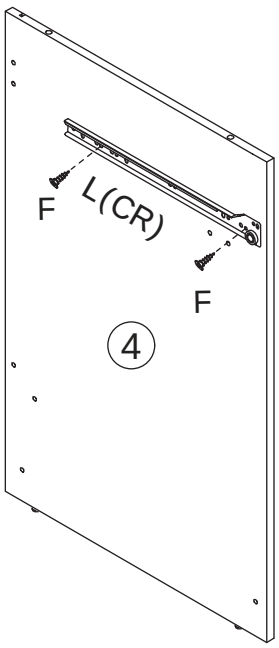

19

B x 10

CRA0635A

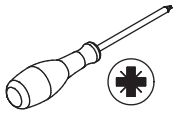

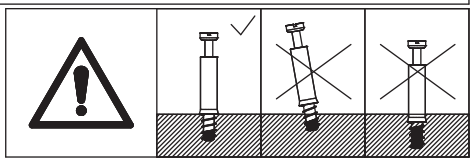

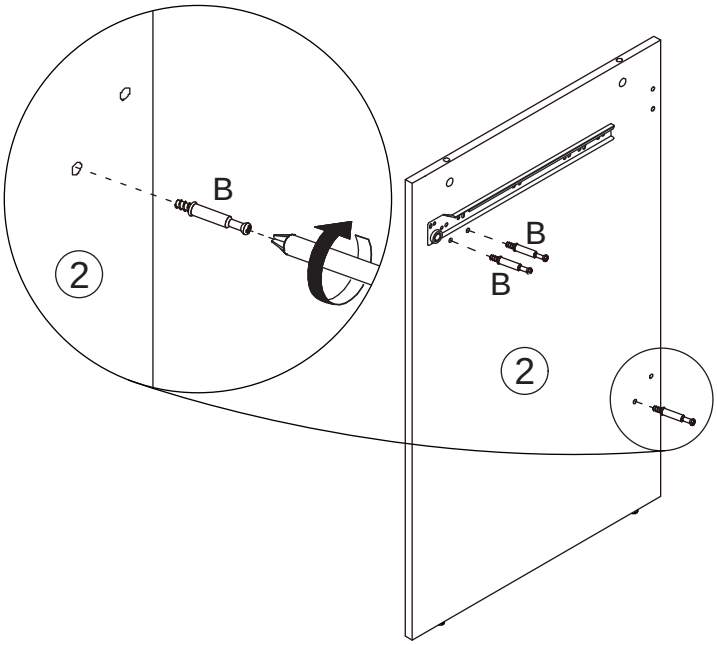

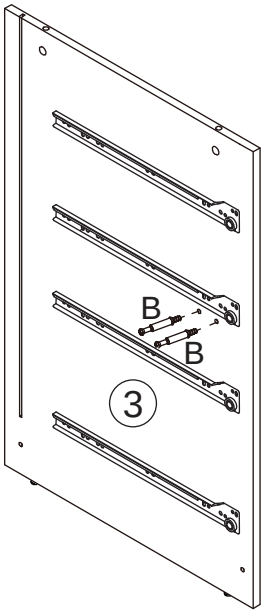

Insert quickfit screw(B) into corresponding holes in board 2,3,4 with a screwdriver as shown.

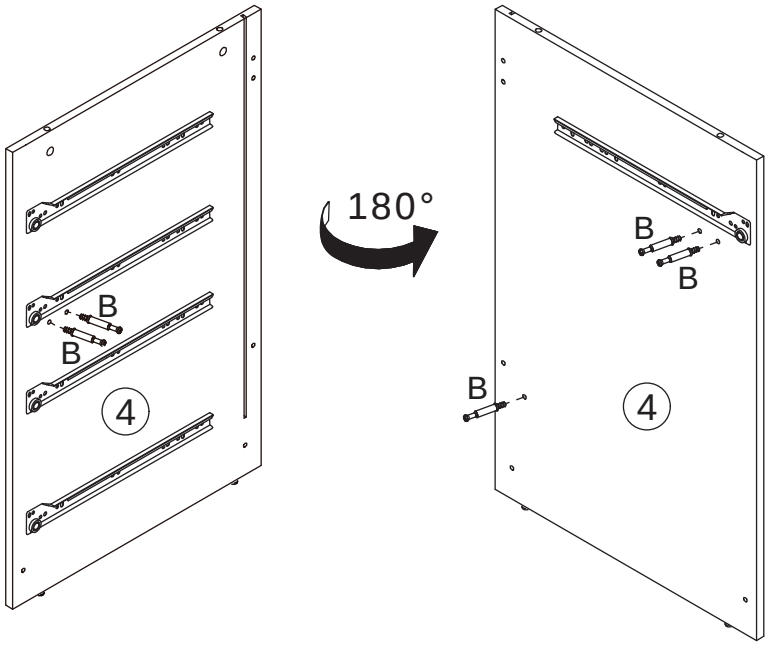

20

A x 3	C x 5
CRB1295A	CRC0540A

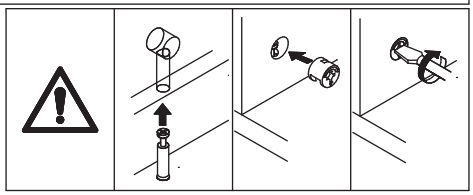

Attach board 8 and 11 to board 4, turn cam locks(A) clockwise to tighten as shown.
Fix board 10 and 11 with screw(C) as shown.

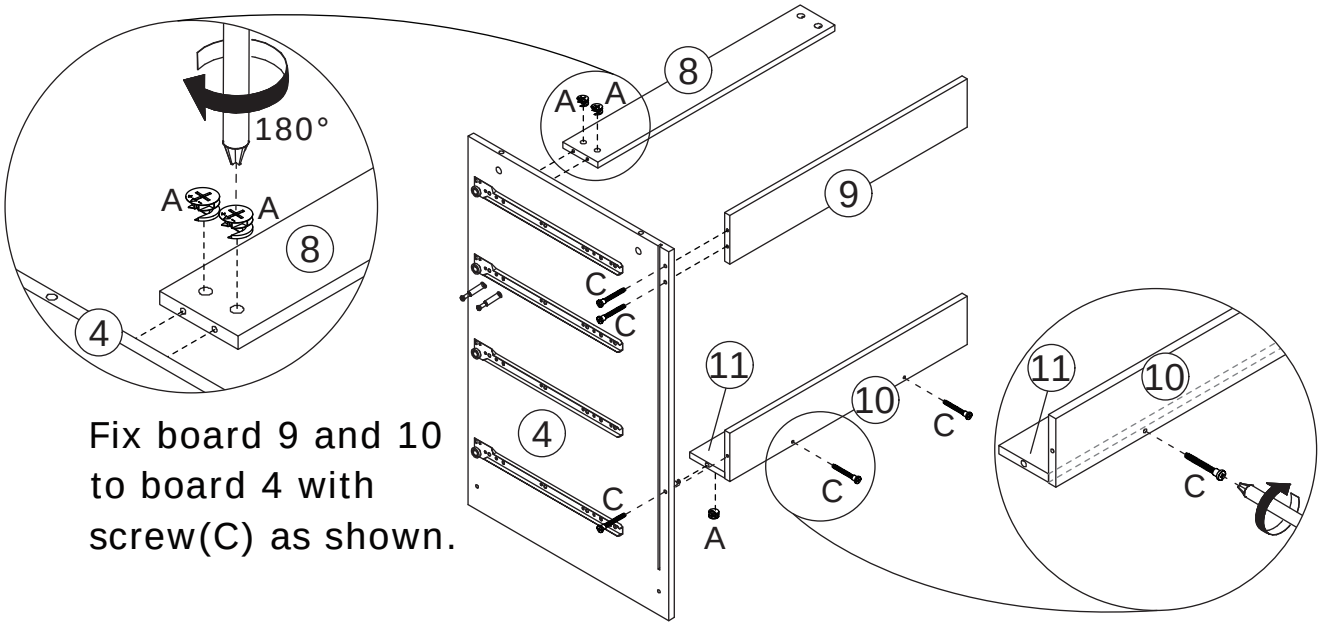

Fix board 9 and 10 to board 4 with screw(C) as shown.

21

A x 3	C x 3
CRB1295A	CRC0540A

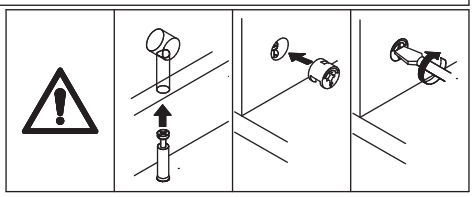

Attach board 2 to board 8 and 11, turn cam locks(A) clockwise to tighten as shown.
Attach board 2 to board 9 and 10 with screw(C) as shown.

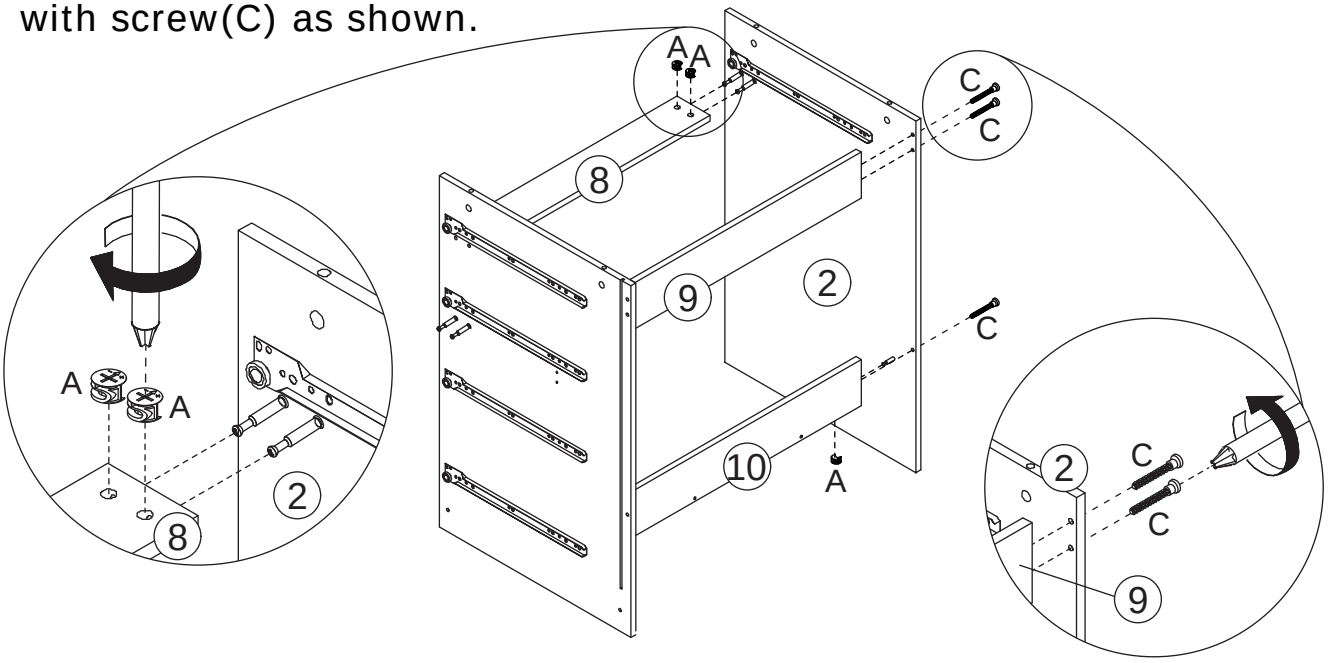

22

A x 4	C x 4	
CRB1295A	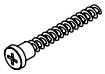 CRC0540A	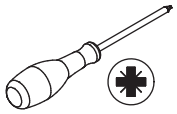

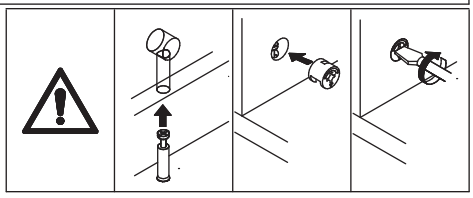

Connect board 3 and 4 with board 7 at first.
Insert cam locks(A) into board 7 and clockwise to tighten.
Fix board 5,6 with board 3,4 with screw(C) as shown.

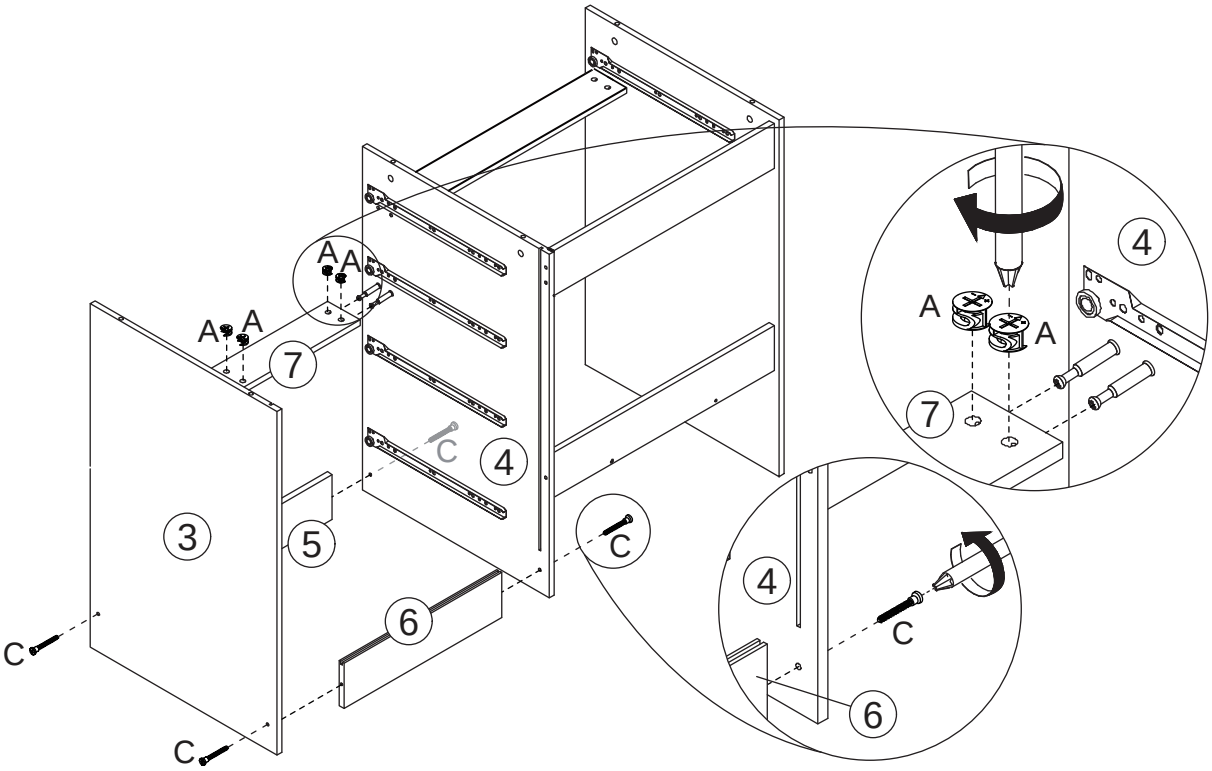

23

Slide board 12 into available slots as shown.

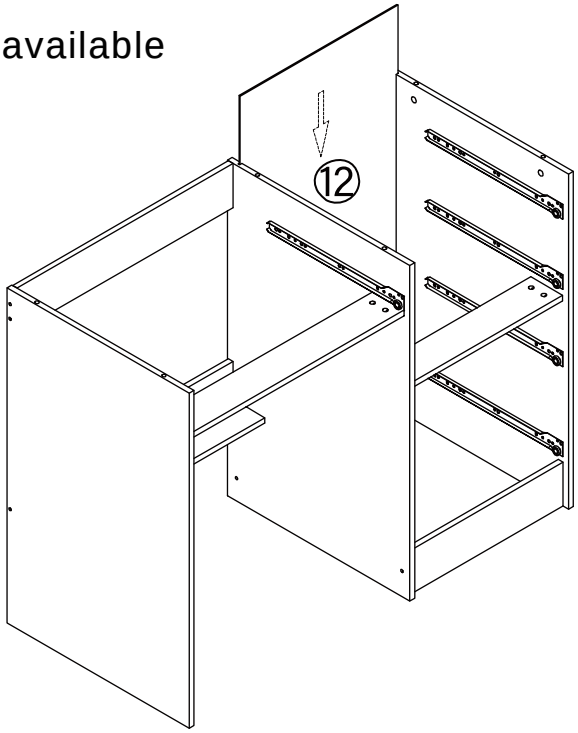

24

B x 6

CRA0635A

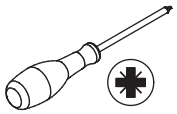

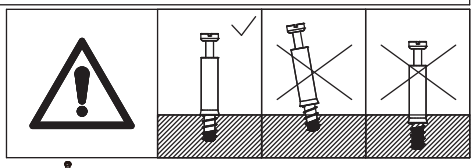

Insert quickfit screw(B) into board 1 with a screwdriver as shown.

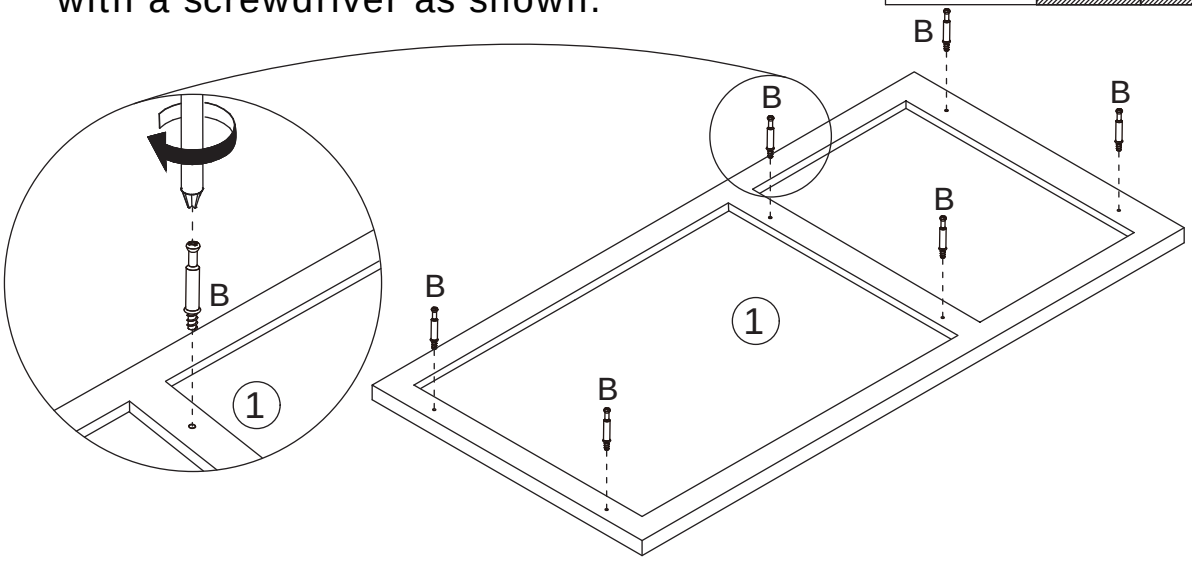

25

A x 6

CRB1295A

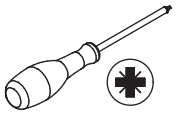

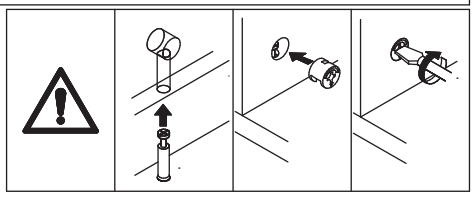

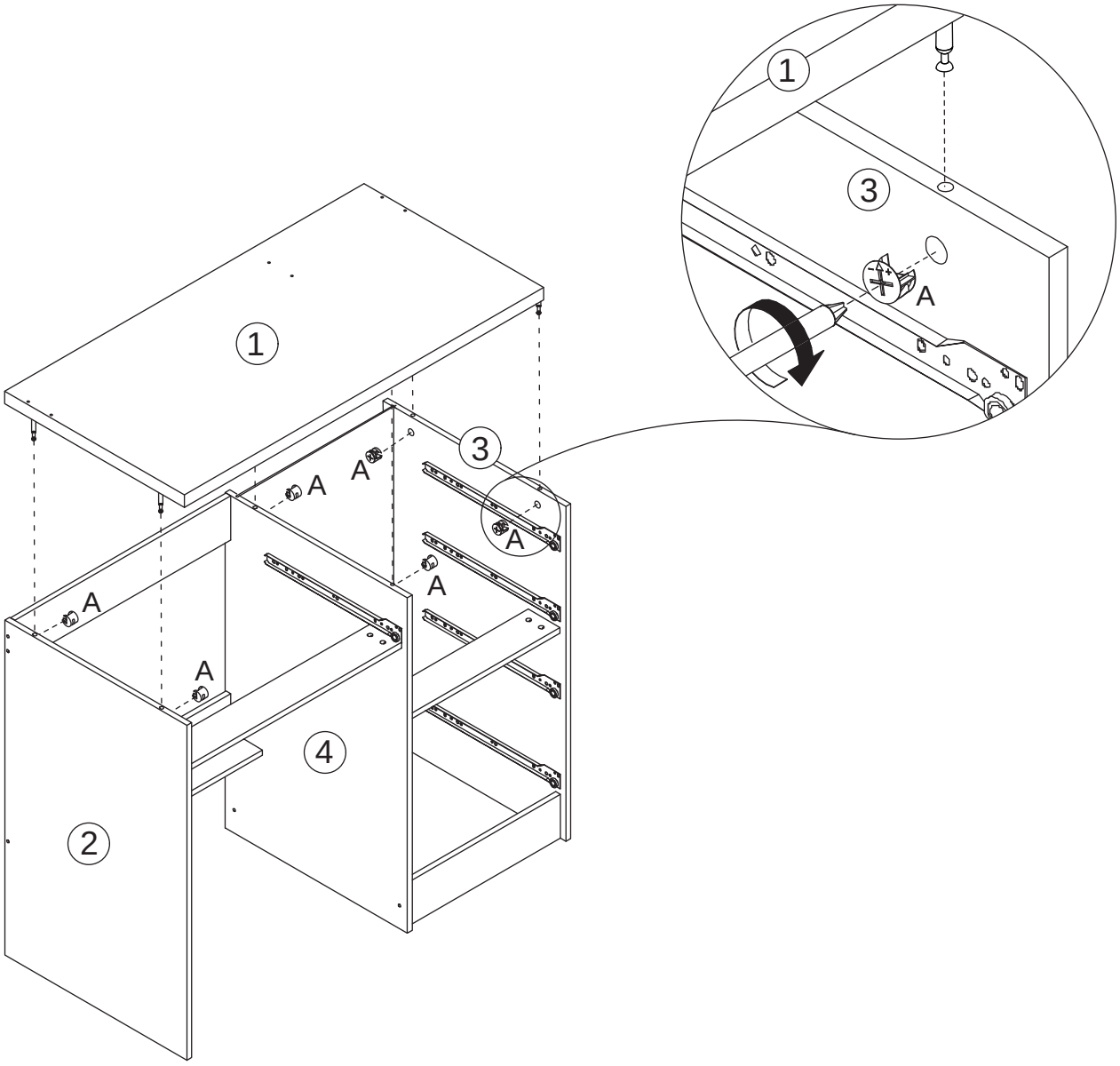

Cover board 1 into the component and turn cam locks(A) clockwise to tighten as shown.

26

B x 22

CRA0635A

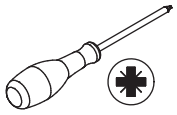

Insert quickfit screw(B) into corresponding holes in board 27,28,29,32,34 with a screwdriver as shown.

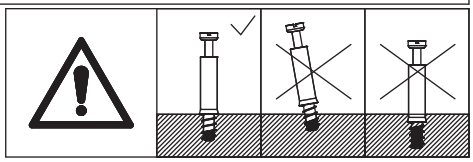

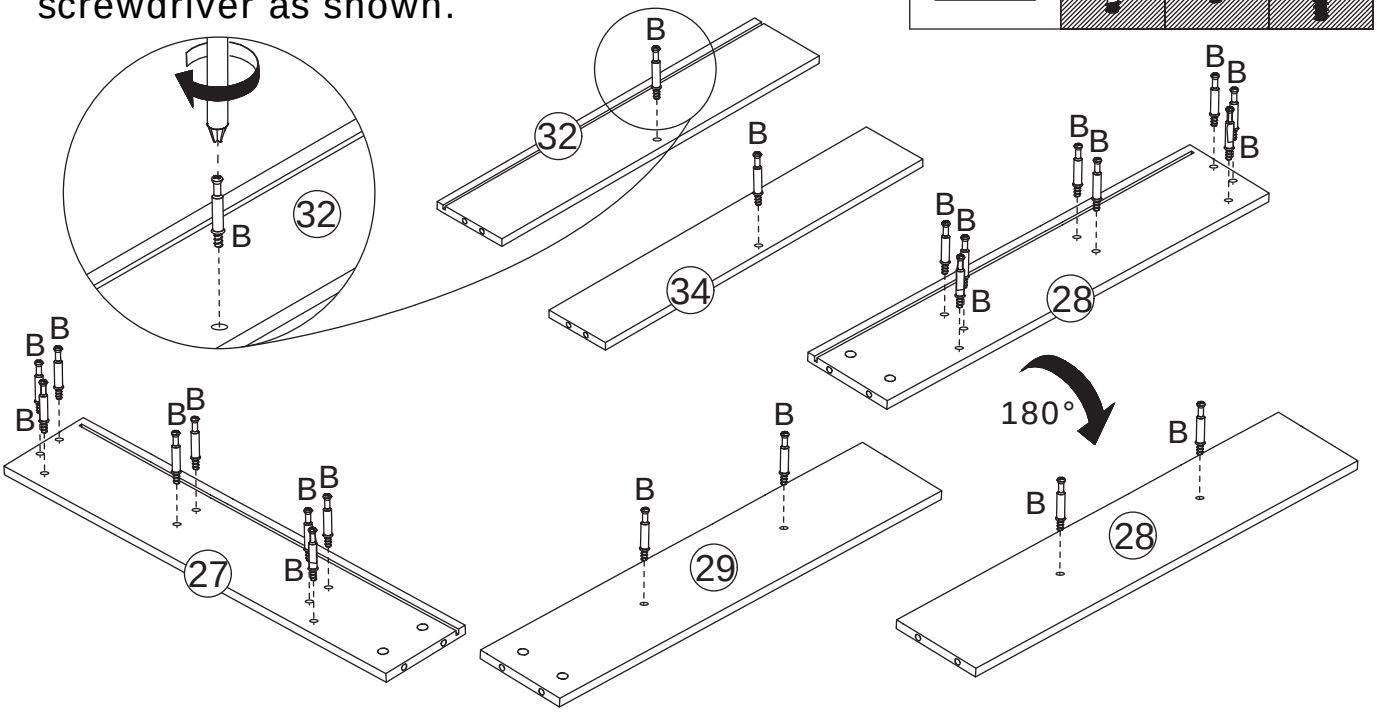

27

A x 2

CRB1295A

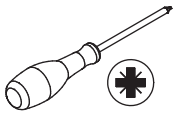

Attach board 32 and board 34 to board 35 respectively and turn cam locks(A) clockwise to tighten as shown.

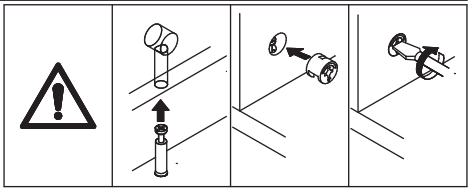

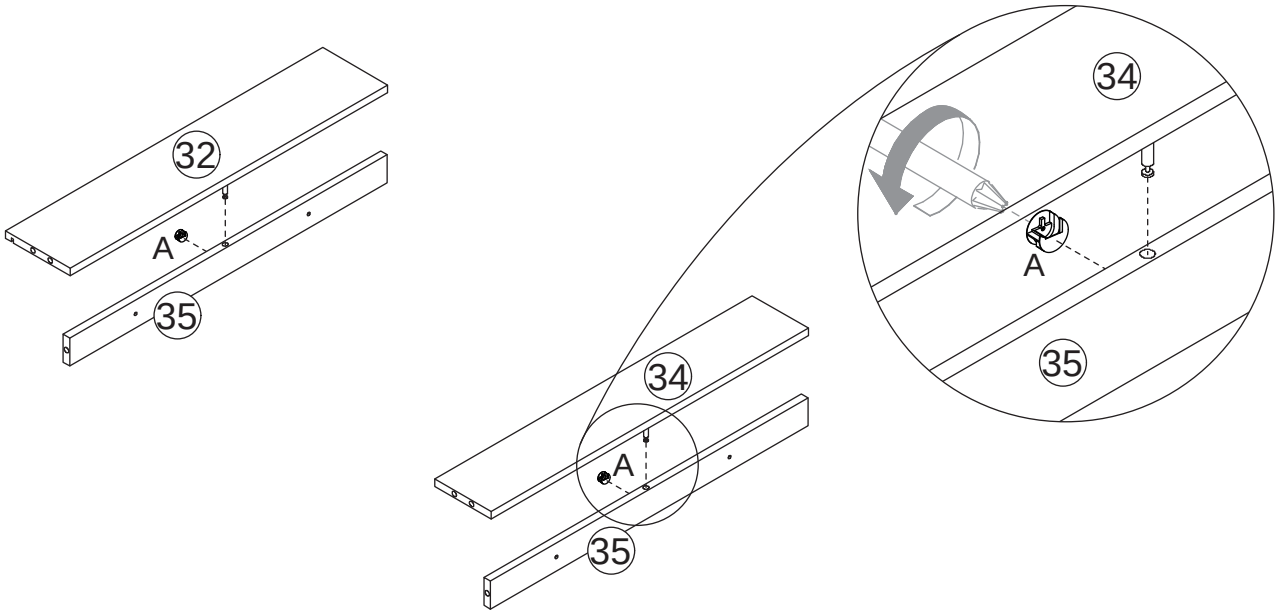

28

Sllides Must Be Separated Before Assembly.
After Separated,Set Aside Until Needed for Assembly.

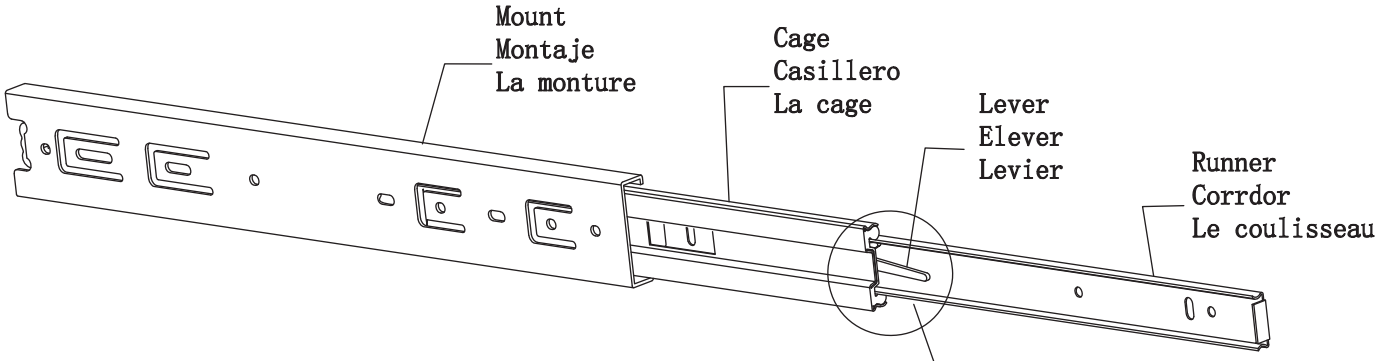

STEP1: Extend Sllde

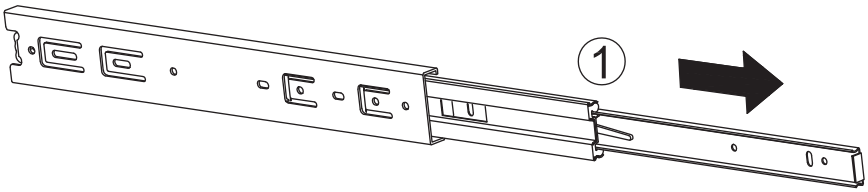

STEP 2: Push Lever UP

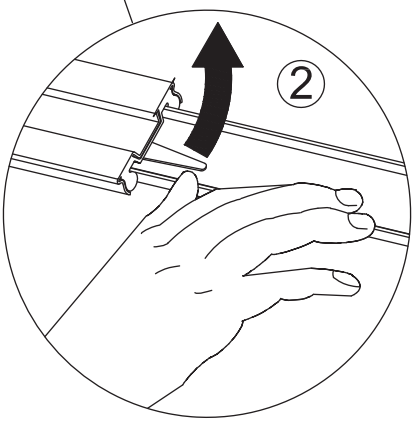

STEP3: Remove Runner

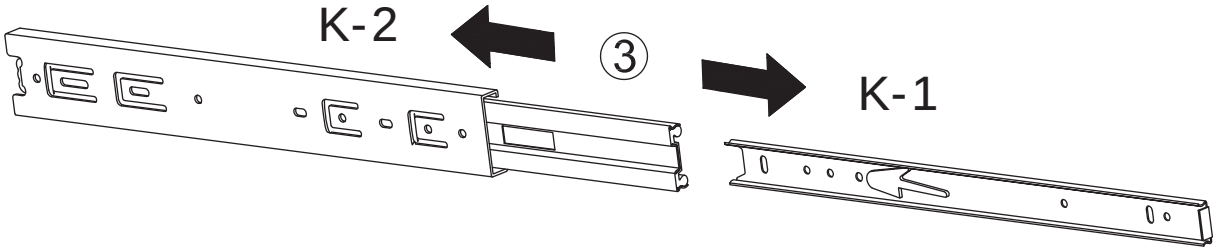

Separate glides(K) into two parts as shown.

29

A x 16	F x 6	K-2 x 2	
CRB1295A	CRD0312A	18”	

Connect board 27,28 with board 32,33,34,35 and turn cam locks(A) clockwise to tighten as shown.
Please pay attention to the alignment grooves.
Fix slide rail(K-2) to board 35 with screw(F) as shown.

Please pay attention to the holes where the accessories are inserted.

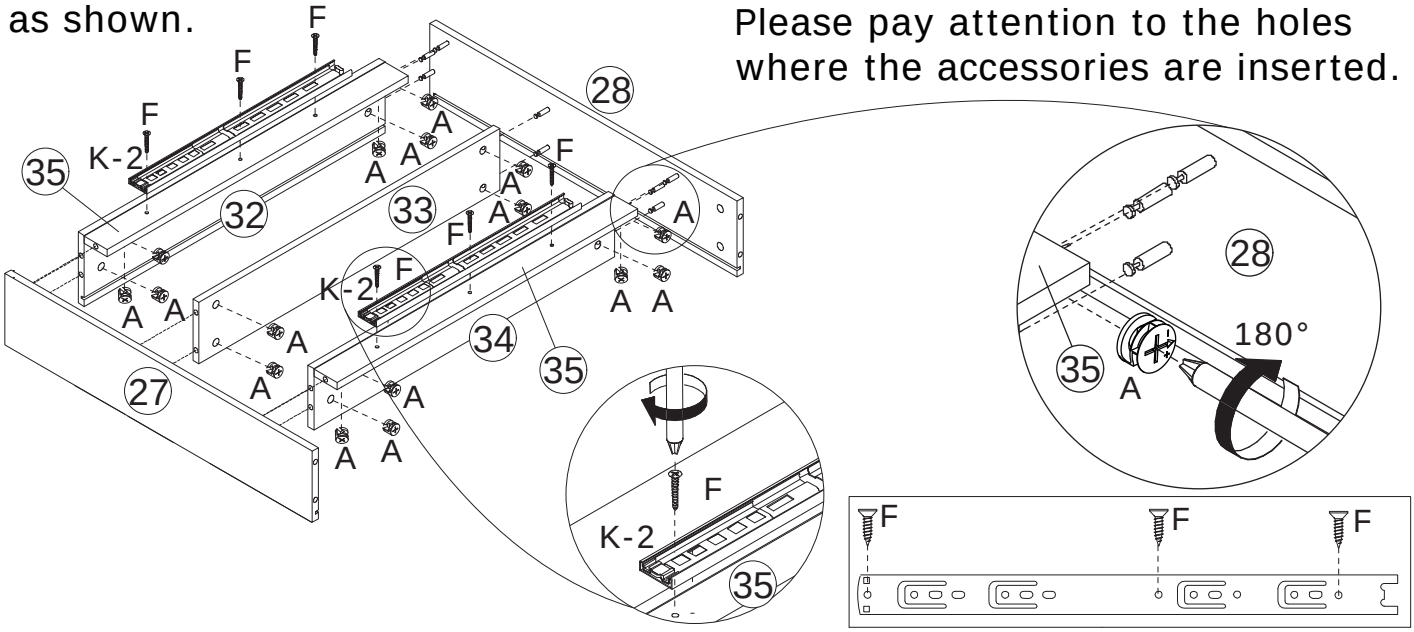

30

A x 4	
CRB1295A	

Connect board 28, 29 with board 30 and turn cam locks(A) clockwise to tighten as shown.

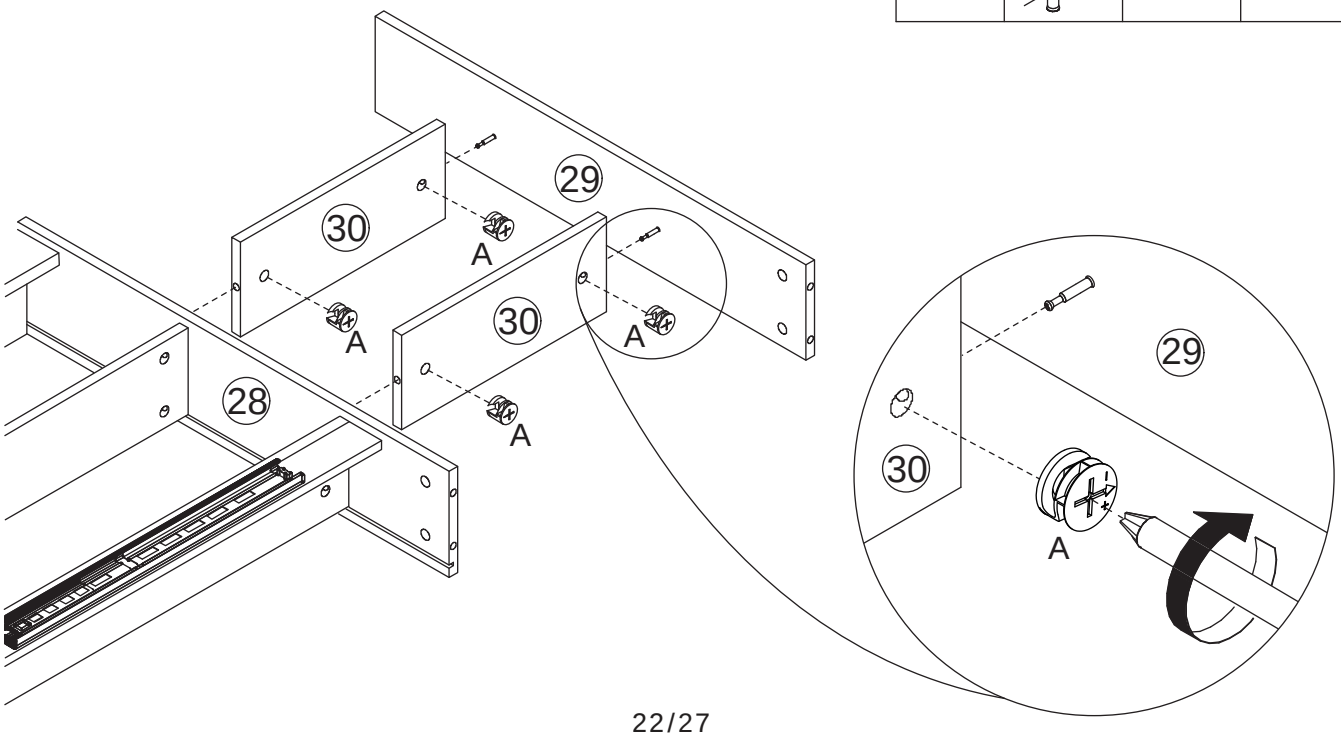

31

C x 2

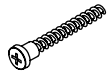

CRC0540A

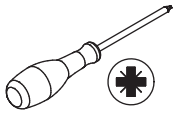

Fix board 31 to the part with screw(C) as shown.
Slide board 36 into available slots.

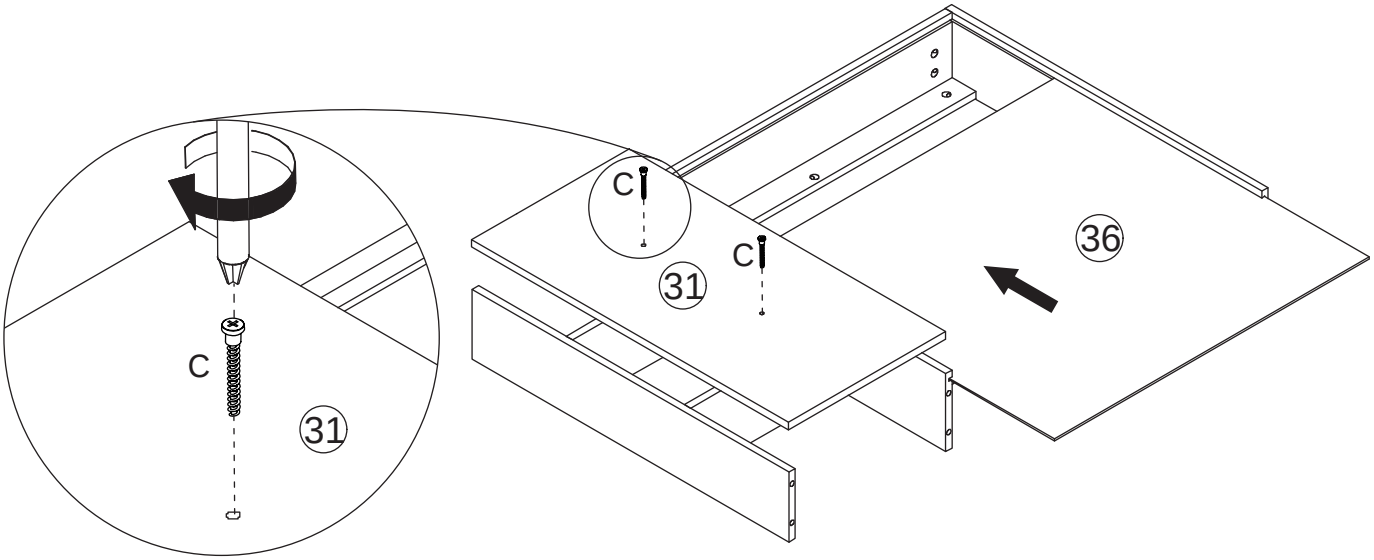

32

B x 6

CRA0635A

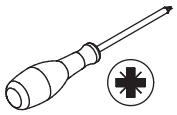

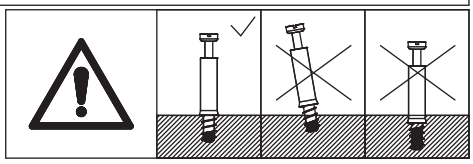

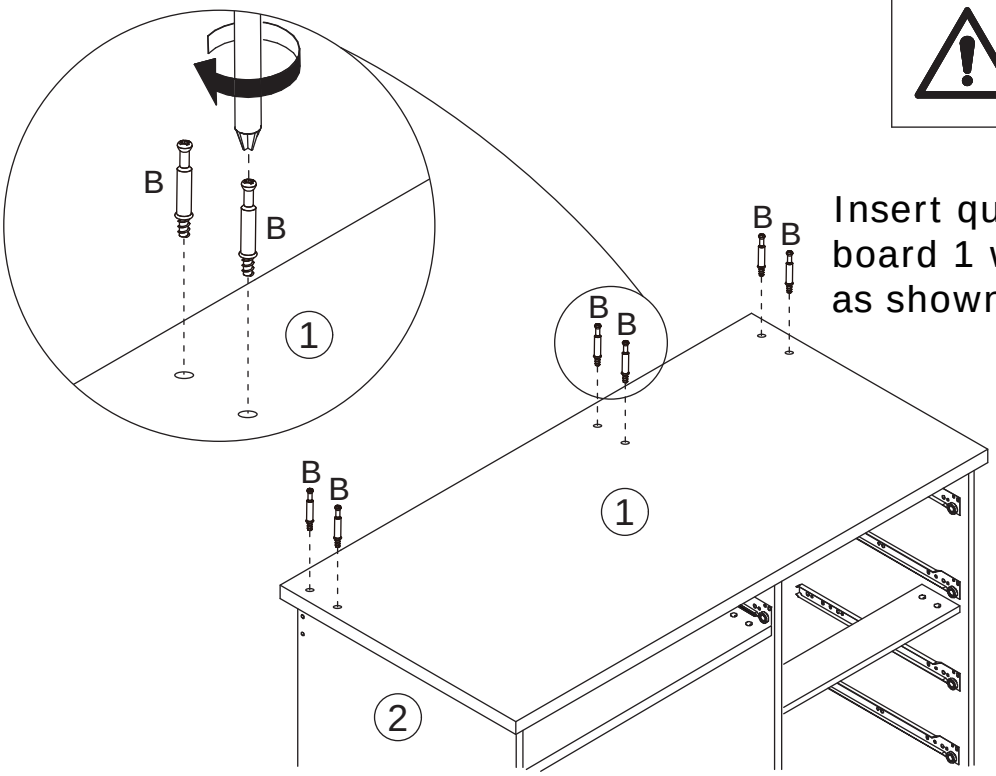

Insert quickfit screw(B) into board 1 with a screwdriver as shown.

33

A x 6

CRB1295A

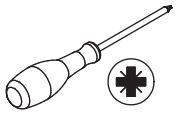

Connect 2 assembled components and turn cam locks(A) clockwise to tighten as shown.

Recommended for more than 2 people!

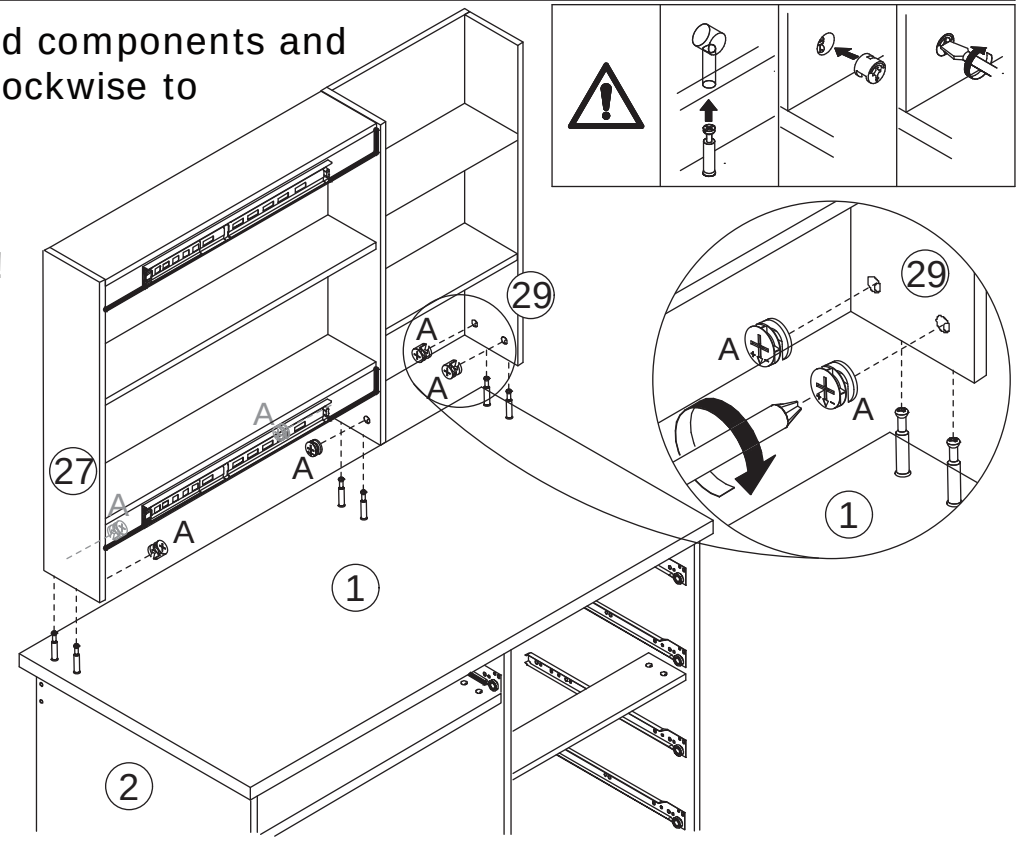

34

F x 5

CRD0312A

K-1 x 2

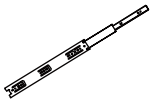

18”

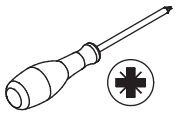

Fix runner(K-1) to board 26 with screw(F) as shown. Please pay attention to the holes where the accessories are inserted.

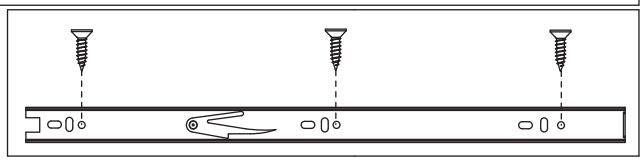

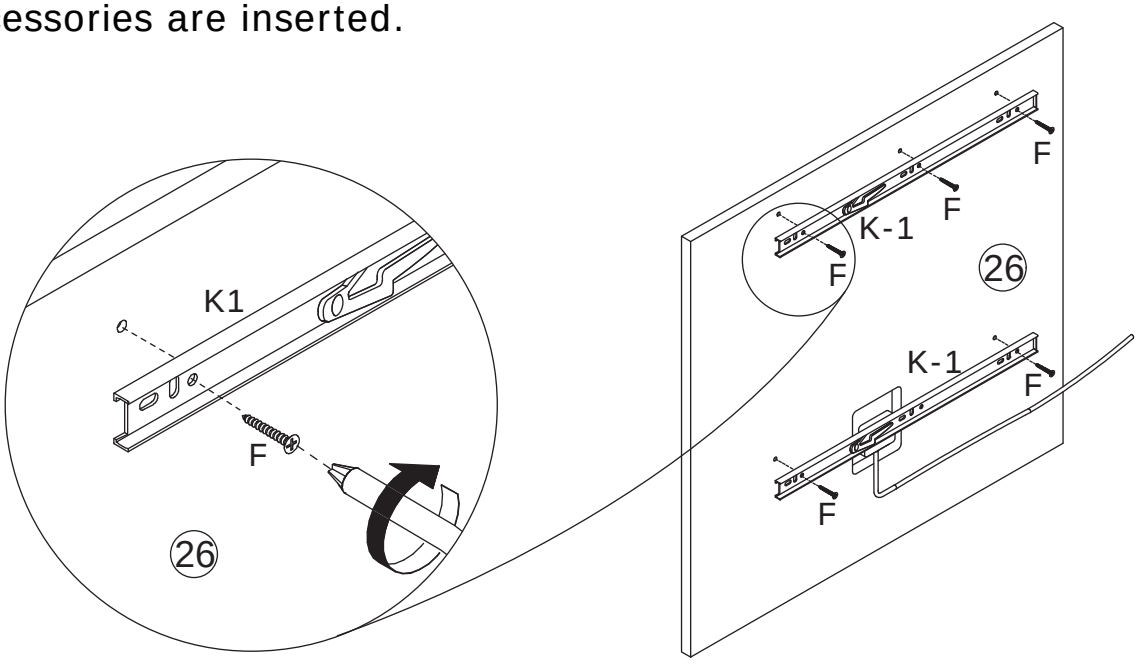

35

Align rails, slide the mirror along the rails and put all drawers.

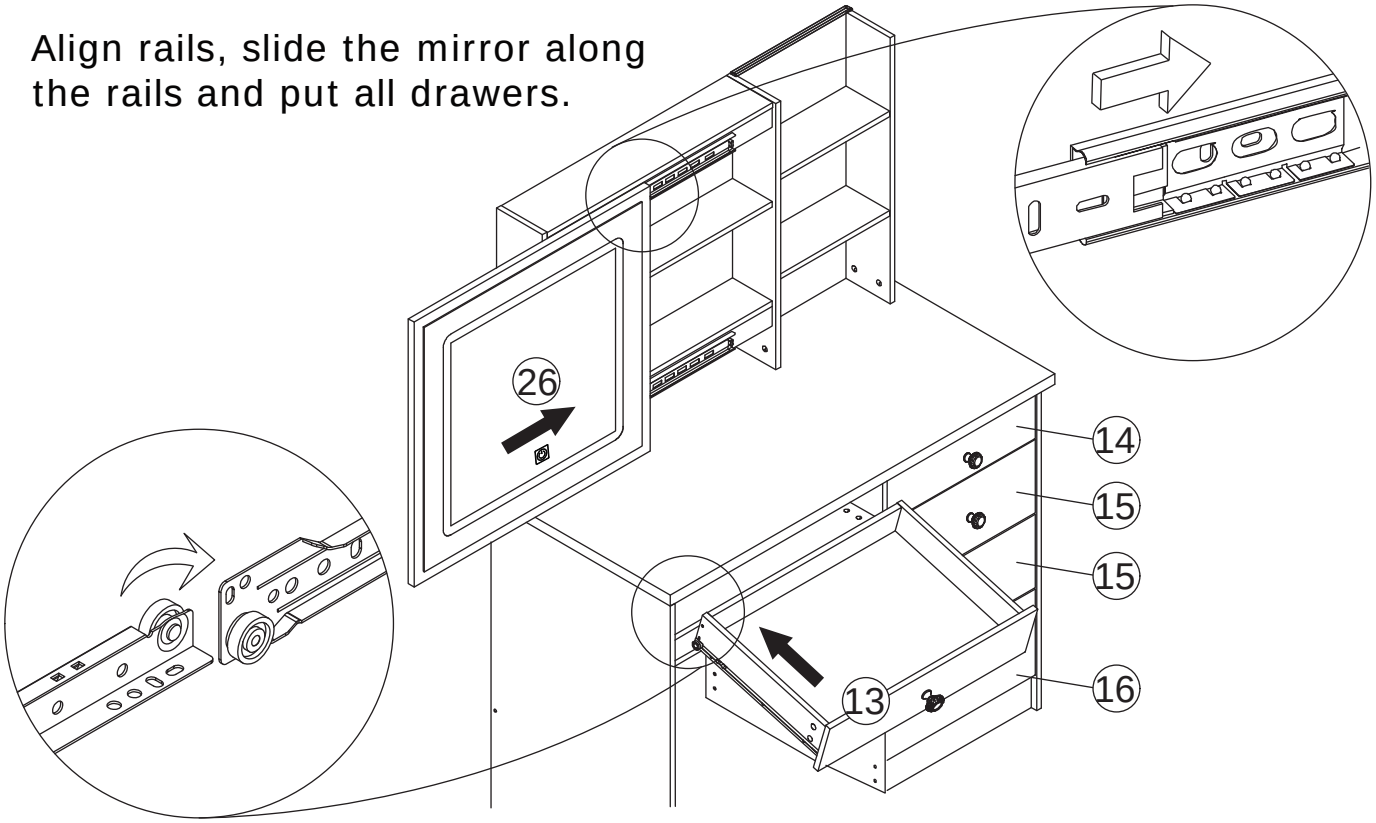

36

C x 8

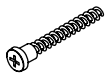

CRC0540A

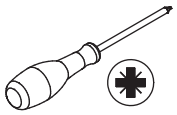

Connect board 37 with board 38 with screw(C) as shown.

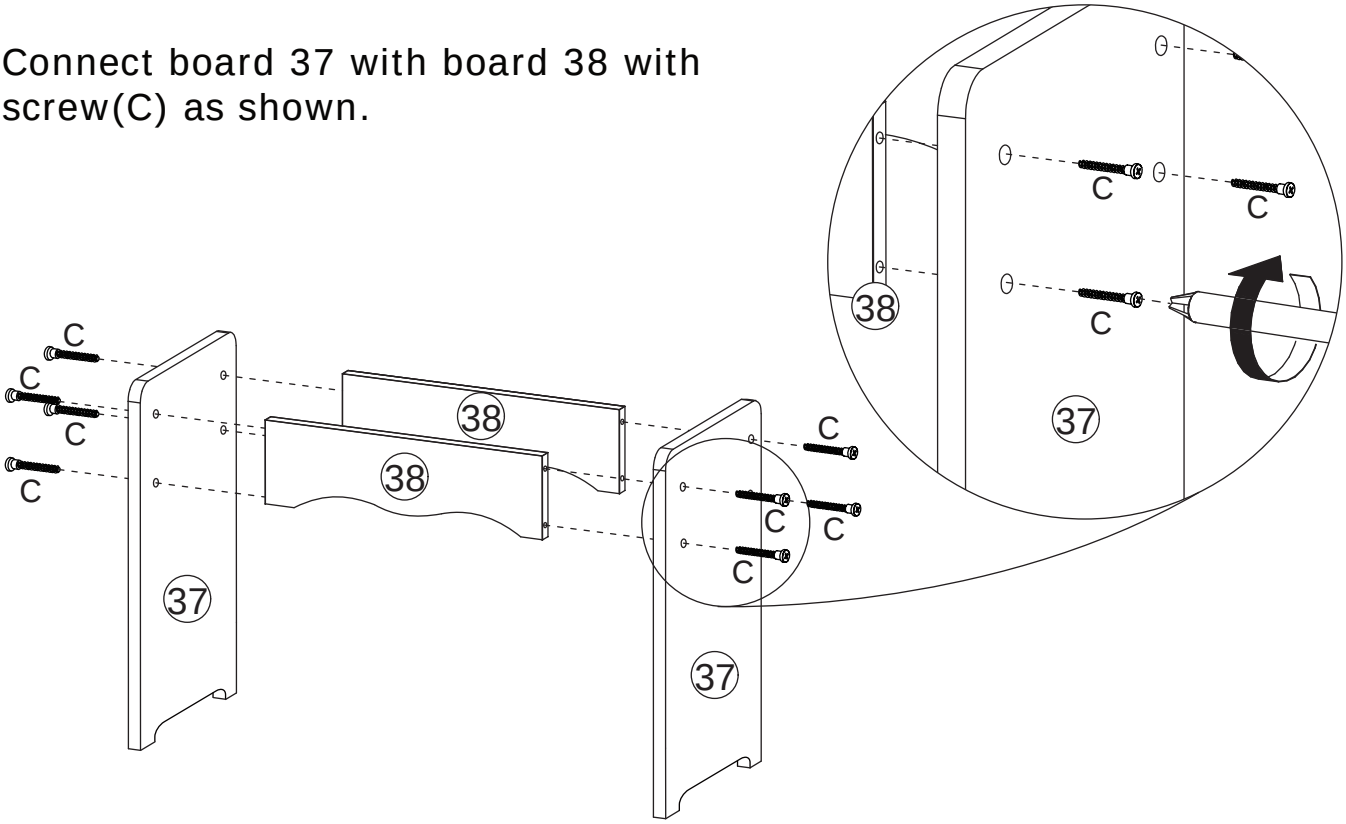

37

F x 16	G x 4	
CRD0312A	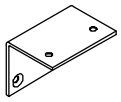	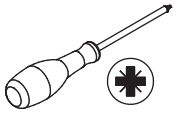

Attach board 39 to stool top and fix corner code(G) to it with screw(F) as shown.

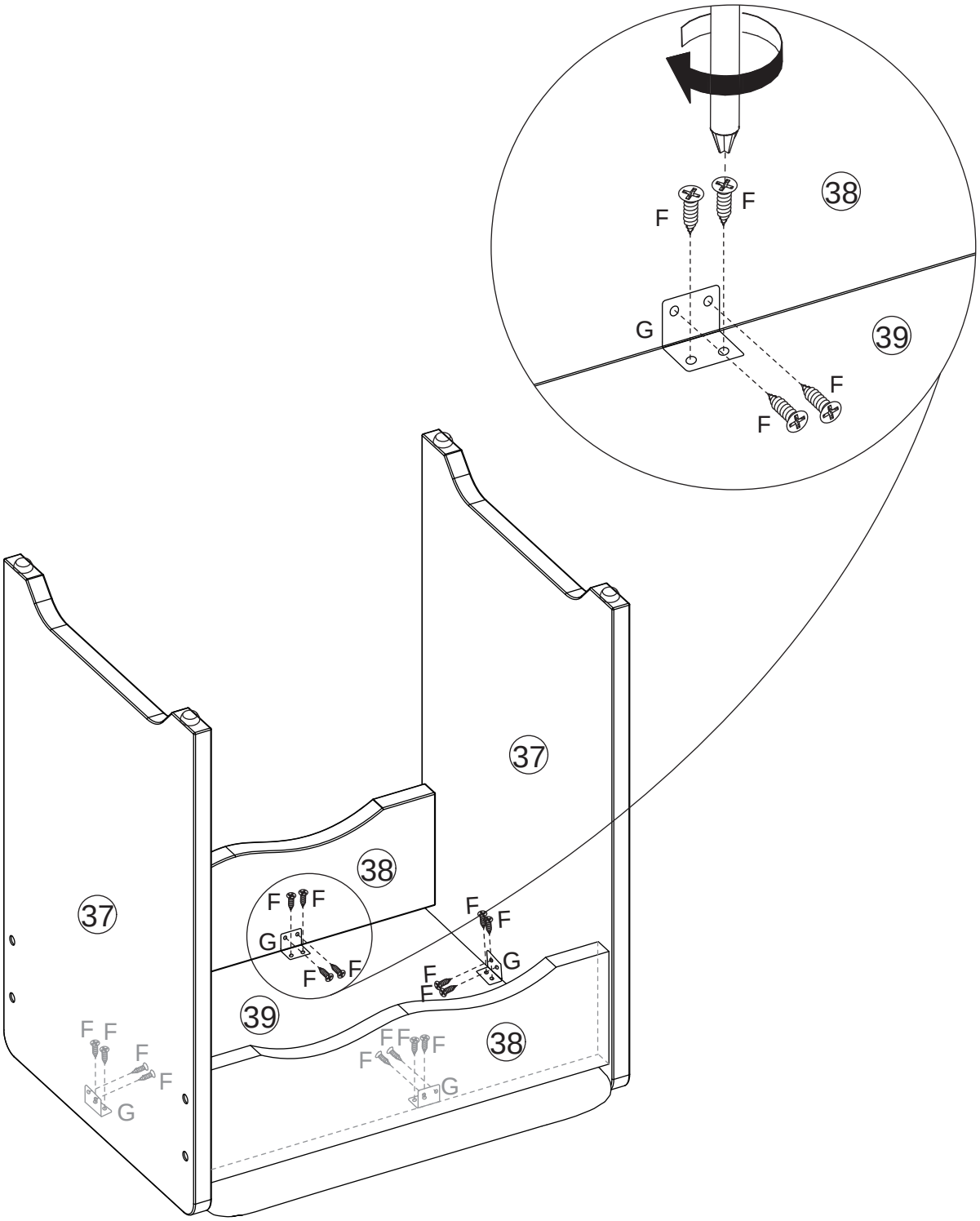

38

Power plug x 1

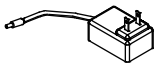

Connect the power cable with light connectors.

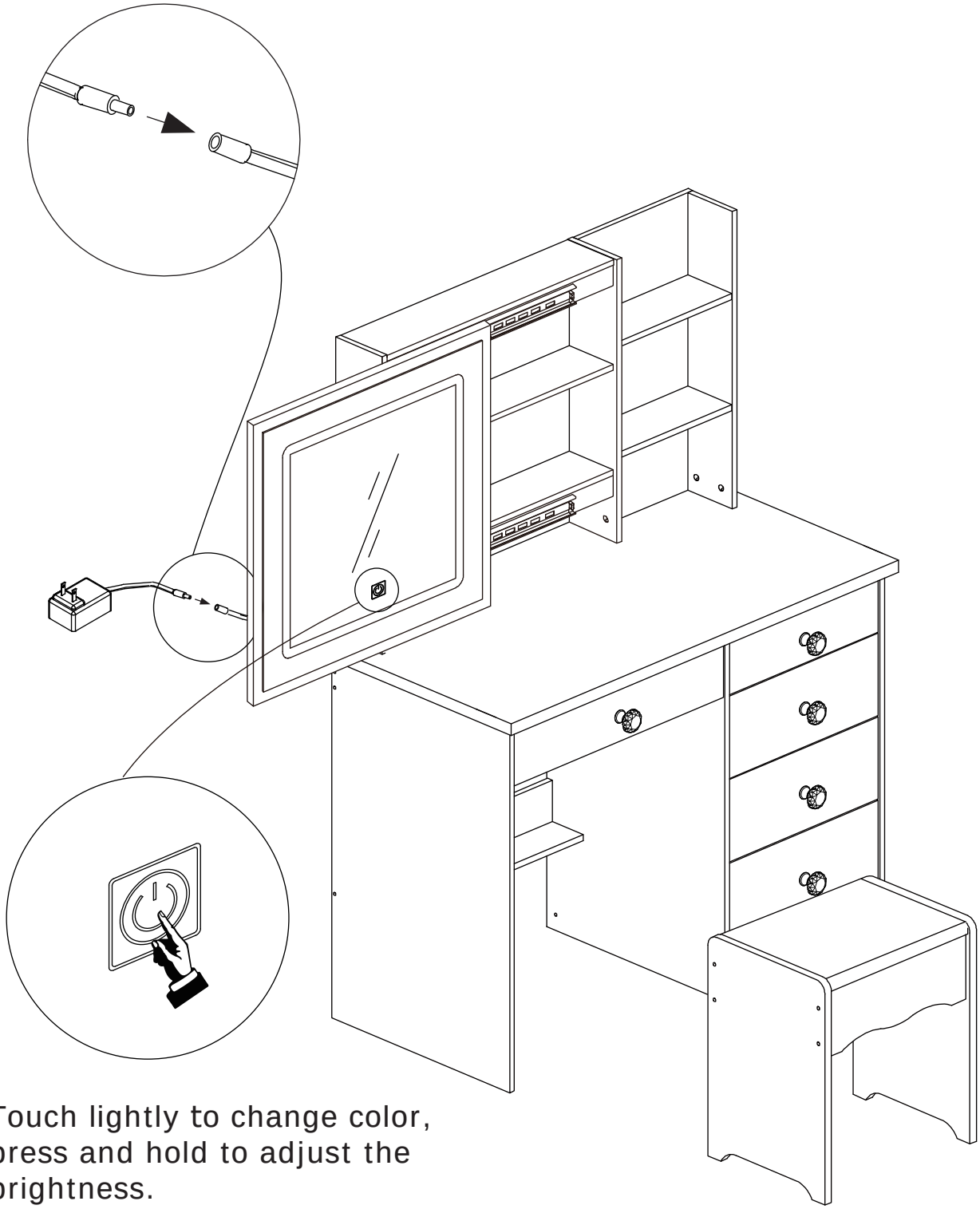

Touch lightly to change color, press and hold to adjust the brightness.

WARRANTY

WARRANTY CLAIMS

•There is a 30-day warranty for broken furniture or any other problems that do not work properly. The warranty will start from the date of purchase which must be verified by proof of purchase.

•Before making a claim, we may be able to answer your query, simply call us. Please leave your purchase order number, along with some details of the problem, if you want a replacement part. We will arrange within 48 hours. If there is out of stock, we will reply with a shipping date.

•The product must be used in accordance with the instructions provided. For health reasons.

•For other reasons, if the furniture needs to be returned, it must be cleaned and dried and operated within 30 days of receipt.

Type of Warranty Claim

•Failure to follow the furniture instructions will invalidate the warranty. Attention please.

•Does not include damage during installation, but includes damage during transportation.

Scope of responsibility

•Shall not bear any responsibility for misuse or user damage and / or loss of parts during the installation of furniture.

•After using, the damage and scratches of the furniture are not covered by the warranty.

The Warranty Relates to All Bought in The Us and Covers The Following Areas

•Sheet parts: 1 month from the date of purchase.

•Electrical parts: 1 month from the date of purchase.

RETURNS

CHANGED YOUR MIND AND NEED TO RETURN YOU ITEM?

PLEASE FOLLOW THE BELOW INSTRUCTIONS:

- If you have purchased and have simply changed your mind, follow the retailer's instructions for returns.

DEFECTIVE ITEMS

- If your item is defective in any way, i.e. it doesn't work but you can't identify why, in the first instance, please call us.

DAMAGED ITEMS

- If you receive an order with obvious shipping damage from the retailer, then we suggest the delivery is refused. If the delivery has been accepted and then shipping damage is found, please follow the specific instructions advised by the retailer.
  In all circumstances please save all packaging material and paperwork for the order. Please be aware that if you dispose of packaging material or attempt to return the merchandise without contacting the fulfiller, you jeopardise your chances of making a claim, and you may not receive a credit for the return.

AFTER-SALES CONTACT

[illegible]

[illegible]