SONOMA 72

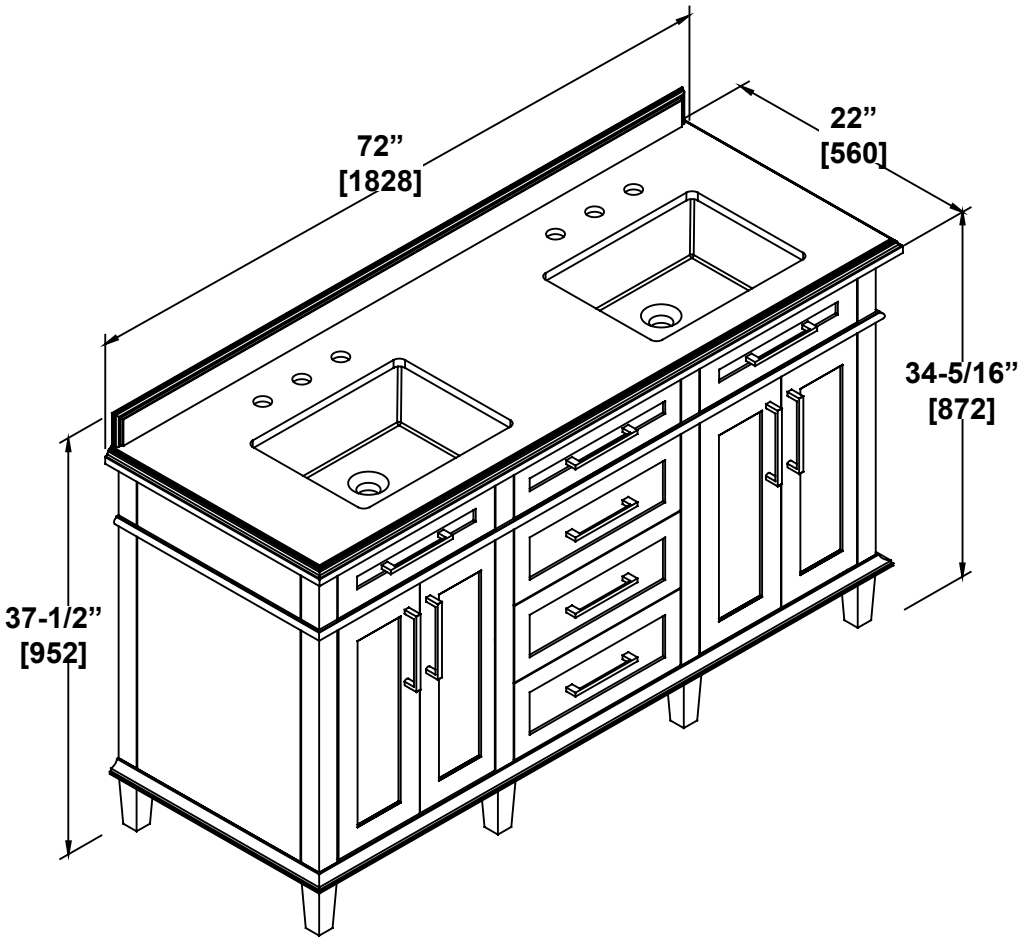
72”
[1828]
22”
[560]
34-5/16”
[872]
37-1/2”
[952]

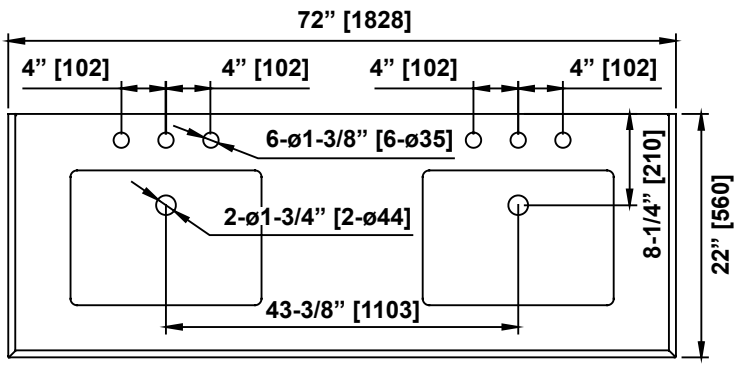
72” [1828]
4” [102]
4” [102]
4” [102]
4” [102]
6-ø1-3/8” [6-ø35]
2-ø1-3/4” [2-ø44]
43-3/8” [1103]
8-1/4” [210]
22” [560]

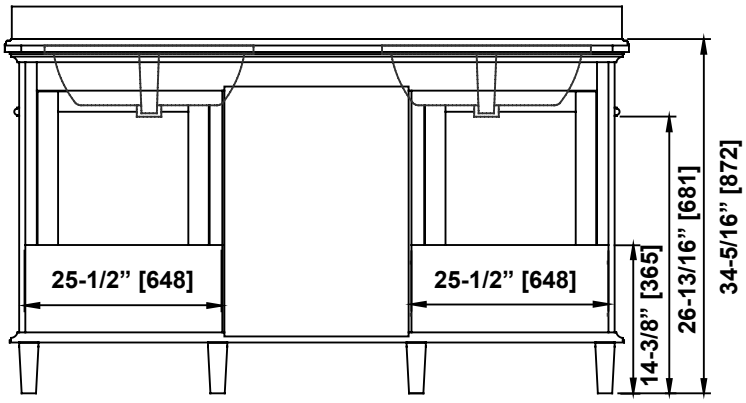
25-1/2” [648]
25-1/2” [648]
14-3/8” [365]
26-13/16” [681]
34-5/16” [872]